EXHIBIT "F"

County of Erie

MARK C. POLONCARZ
COUNTY EXECUTIVE

DIVISION OF PURCHASE

STANDARD AGREEMENT

This AGREEMENT, made as of the 18th DAY OF AUGUST, 2017

by and between VISONE CONSTRUCTION, INC.

of 79 SHELDON AVENUE, DEPEW, NY 14043

herein after referred to as the Contractor, and the County of Erie, a municipal corporation of the State of New York, hereinafter referred to as the County:

WHEREAS, in accordance with public open competitive bidding, sealed proposals were received and publicly opened by the County of Erie, Division of Purchase

on JULY 27, 2017 at 11:00AM

for: SEWER REPAIR

WHEREAS, the bid of the Contractor submitted in accordance therewith, the sum of $2,109,060.00, was the lowest responsible bid submitted; and

WHEREAS, a contract is hereby awarded to the Contractor by the County, in accordance with the provisions therein contained; and

WHEREAS, the Notice to Bidders and Specifications make provisions for entering into a proper and suitable contract in connection therewith;

NOW, therefore, the Contractor does hereby for its heirs, executors, administrators and successors agree with the County of Erie that, the Contractor shall for the consideration mentioned, and in the manner set forth in Accepted Invitation to Bid No. 217204-002 , Specifications and Provisions of Law annexed hereto and forming a part of this contract, furnish the equipment and materials and perform the work and services described in the Accepted Bid for the above sum.

_____ Paid monthly upon presentation of invoices.

_____ Upon delivery, completion and approval of the work, as per specifications.

Please refer to the Invitation to Bid (Page 1) and the Instructions to Bidders which are part of this agreement.

IN WITNESS THEREOF, the parties hereto have hereunto set their hands and seals the day and year first above written.

COUNTY OF ERIE

by _____
Director of Purchase

Date_____

CONTRACTOR: VISONE CONSTRUCTION, INC.

by _____

Title PRESIDENT

Date 9/13/17

APPROVED AS TO FORM

_____
Assistant County Attorney
County of Erie, New York

Date_____

COUNTY OF ERIE

MARK POLONCARZ
COUNTY EXECUTIVE
DIVISION OF PURCHASE
INVITATION TO BID

Bids, as stated below, will be received and publicly opened by the Division of Purchase in accordance with the attached specifications. FAX bids are unacceptable. Bids must be submitted in a sealed envelope to:

County of Erie
Division of Purchase
Attention:
95 Franklin Street, Room 1254
Buffalo, New York 14202-3967

NOTE: Lower left hand corner of envelope MUST indicate the following:

BID NUMBER: 217204-002

OPENING DATE: July 27, 2017 TIME: 11:00 AM

FOR : Erie County DSM Sewer Repair Term Contract; ECSD No. 1,2,3,4,5,6,8 Contract No. 79

NAME OF BIDDER:

VISONE CONSTRUCTION INC
79 SHELDON AVE
DEPEW NY 14043

If you are submitting other Invitations to Bid, each bid must be enclosed in a separate envelope.

Following EXHIBITS are attached to and made a part of the bid specifications, and part of any agreement entered into pursuant to this Invitation to Bid:

X EXHIBIT "A" - Assignment of Public Contracts
X EXHIBIT "B" - Purchases by Other Local Governments or Special Districts
X EXHIBIT "C" - Construction/Reconstruction Contracts
X EXHIBIT "D" - Bid Bond (Formal Bid)
X EXHIBIT "F" - Standard Agreement
X EXHIBIT "G" - Non-Collusive Bidding Certification
X EXHIBIT "PW" – New York State Prevailing Wage
X EXHIBIT "H" - MBE/ WBE Commitment **10% MBE 2% WBE,** Prime Cont. Aff. & EEO Req.
X EXHIBIT "IC" - Insurance **Classification "A"**
X EXHIBIT "P" & EXHIBIT "PBI" - Performance Bond
X EXHIBIT "Q" - Payment Bond
X EXHIBIT "M" - Confined Space Certification & OSHA 10 Compliance Certification
X EXHIBIT "J" - New York State Certified Worker Training Program Certification
X EXHIBIT "R" - Erie County Equal Pay Certification
X EXHIBIT "K" - Additional I.B. Section
X EXHIBIT "PR" - Proposal (Bidders shall complete Bid Items, Bid Total and Forms)
X EXHIBIT "N" - General Contract Conditions
X EXHIBIT "O" - Specific Contract Conditions
X EXHIBIT "L" - Technical Specifications (Div. 1, 2, 3, Details)

County of Erie
DIVISION OF PURCHASE
BID SPECIFICATIONS

BID NO 217204-002

Ship to: County of Erie
Attention:
Address:

Ship Via:

Date

Required at Destination:

ITEM NO.	QUAN-TITY	U/M	CATALOG NO./DESCRIPTION	UNIT PRICE	TOTAL PRICE
			The contract is located in Erie County, New York. The successful		
			bidder will provide Gravity Sewer and Forcemain Repairs and all		
			associated appurtenant services as further detailed in the Proposal		
			section for existing 8-inch through 42-inch diameter sanitary &		
			storm sewers in Erie County Sewer Districts No. 1,2,3,4,5,6,8.		
			Assignments will be completed on a work order basis.		
			The term construction contract will be in place for a period of two (2) years.		
			A Pre-Bid Meeting is scheduled for: July 10, 2017 Time: 9:00 AM at Erie		
			County Rath Building Room 1004, 95 Franklin Street, Buffalo, NY 14202.		
			For questions contact Erie County Div. of Sewerage Management		
			Nadine R. Wetzel P.E. 716-858-6145		

NOTE: Bid results cannot be given over the phone. All requests for bid results should be submitted in writing or faxed to:

ERIE COUNTY DIVISION OF PURCHASE
Freedom of Information Officer
95 Franklin Street, Rm. 1254
Buffalo, NY 14202
FAX #: **716/858-6465**

TOTAL NET BID DELIVERED INSIDE $2,145,410.00

NAME OF BIDDER Visone Construction, Inc.

(Rev. 9/95)

County of Erie

DIVISION OF PURCHASE

INSTRUCTIONS TO BIDDERS (FORMAL)

1. BID SHALL BE SUBMITTED ON THESE COUNTY OF ERIE BID FORMS or bid will not be considered. Bid must be typed or printed in ink. Original autograph signatures in ink are required. Facsimile or rubber stamp signatures will not be accepted. ALL PAGES OF THIS BID DOCUMENT MUST BE RETURNED INTACT.

2. LATE PROPOSALS. Any bids received in the Erie County Division of Purchase after the date and time prescribed will not be considered for contract award.

3. EMERGENCY CLOSINGS. In the event the closing of certain County facilities and/or operations and/or services due to any flood, fire, fire drill, power failure, uncontrolled weather conditions or other cause beyond the Division of Purchase control, only bids received in the Division of Purchase prior to the date and time or postmarked as of the date prescribed will be considered for contract award.

4. ANY CHANGE IN WORDING OR INTERLINEATION BY A BIDDER OF THE INQUIRY AS PUBLISHED BY THE COUNTY OF ERIE shall be reason to reject the proposal of such bidder, or in the event that such change in the Invitation to Bid is not discovered prior to entering into a contract, to void any contract entered into pursuant to such bid.

5. THE COUNTY RESERVES THE RIGHT TO REJECT any and all bids, to accept either in whole or in part any one bid or combination of bids, as may be provided in the bid specifications, or to waive any informalities in bids. The County does not obligate itself to accept the lowest or any other proposal.

6. AWARD TO THE LOWEST RESPONSIBLE BIDDER. For the purpose of determining which bidder is the lowest qualified responsible bidder, it shall be the lowest three bidders' responsibility, within FIVE DAYS of being so notified by the Division of Purchase, to present information and documentation to the Division of Purchase, to satisfy the County that the bidder possesses sufficient capital resources, skill, judgment and experience to perform the work or deliver the material, as per bid specifications.

7. CONTRACT(S) OR PURCHASE ORDER(S) WILL BE AWARDED after due consideration of the suitability of goods and/or services bid to satisfy these specifications, the total cost of such goods and/or services including all cost elements, and the timeliness of the agreed upon delivery date.

8. This EXECUTORY CLAUSE shall be a part of any agreement entered into pursuant to this bid:

IT IS UNDERSTOOD BY THE PARTIES THAT THIS AGREEMENT SHALL BE EXECUTORY ONLY TO THE EXTENT OF THE MONIES AVAILABLE TO THE COUNTY OF ERIE AND APPROPRIATED THEREFOR, AND NO LIABILITY ON ACCOUNT THEREOF SHALL BE INCURRED BY THE COUNTY BEYOND THE MONIES AVAILABLE AND APPROPRIATED FOR THE PURPOSE THEREOF.

9. FAILURE TO MEET DELIVERY SCHEDULE as per accepted bid may result in legal action by the County of Erie to recover damages.

10. PRICES SHALL BE QUOTED F.O.B. DESTINATION AND DELIVERED INSIDE. "Tailgate delivery" will not be accepted unless specified by the County.

11. COLLECT TRANSPORTATION CHARGES WILL NOT BE PAID BY THE COUNTY. All freight, cartage, rigging, postage or other transportation charges shall be prepaid and included in the bid. There will be no additional charges for delivery.

12. NO TAXES ARE TO BE BILLED TO THE COUNTY. Bids shall not include any Federal, State, or local excise, sales, transportation, or other tax, unless Federal or State law specifically levies such tax on purchases made by a political subdivision. The County of Erie Purchase Order is an exemption certificate. Any applicable taxes from which the County is <u>not</u> exempt shall be listed separately as cost elements, and added into the total net bid.

13. THE SUCCESSFUL BIDDER shall comply with all laws, rules, regulations and ordinances of the Federal Government, the State of New York and any other political subdivision of regulatory body which may apply to its performance under this contract.

County of Erie
DIVISION OF PURCHASE

14. GRATUITIES, ILLEGAL OR IMPROPER SCHEMES. The County may terminate this agreement if it is determined that gratuities in the form of entertainment, gifts or otherwise were offered or given by a vendor, his agent or representative to any County official or employee with a view towards securing favorable treatment with respect to the awarding of this bid or the performance of this agreement. The County may also terminate this agreement if it is determined that the successful bidder engaged in any other illegal or improper scheme promotive of favoritism or unfairness incidental to the bidding process or the performance of this agreement. In the event that it is determined that said improper or illegal acts occurred, the County shall be entitled to terminate this agreement and/or exercise any other remedy available to it under existing law.

15. INSURANCE shall be procured by the Successful Bidder before commencing work, no later than 14 days after notice of award and maintained without interruption for the duration of the Contract, in the kinds and amounts specified in Exhibit IC, unless otherwise stipulated in these Bid Specifications. IF THE INSURANCE IS NOT PROVIDED IN ACCEPTABLE FORM WITHIN THIS PERIOD OF TIME, THEN THE DIRECTOR OF PURCHASE MAY DECLARE THE VENDOR NONRESPONSIVE AND AWARD THE CONTRACT TO THE NEXT LOW RESPONSIBLE BIDDER.

CERTIFICATES OF INSURANCE shall be furnished by the successful bidder on Erie County Standard Insurance Certificate, Exhibit IC.

16. ANY CASH DISCOUNT which is part of bid <u>will be</u> considered as a reduction in the bid prices in determining the award of the bid. Date of invoice must not precede date of delivery. The County policy is to pay all claims in a timely manner within the specified time. However, if for some reason payment is delayed, the County will take the discount when payment is made. The County will not pay any interest charges, nor refund discount amounts taken after the discount period. If this is unsatisfactory, please quote net.

17. CHANGES IN THE WORK. The County may, as the need arises, through the Director of Purchase, order changes in the work through additions, deletions, or modifications without invalidating the contract. Compensation, as it may be affected by any change, shall be adjusted by agreement between the contractor and County through the Director of Purchase.

18. BID OFFERING MATERIAL OTHER THAN THAT OF SPECIFIED MANUFACTURER OR TRADE NAME will be considered unless stated otherwise. The use of the name of a particular manufacturer, trade name, or brand in describing an item does not restrict a bidder to that manufacturer or specific article. However, the substituted article on which a proposal is submitted must be of such character or quality that it would serve the purpose for which it is to be used equally well as the manufacturer or brand specified. Proposals will be accepted in accordance with specifications on file or approved equal.

19. IF MATERIAL OR SERVICES OTHER THAN THOSE SPECIFIED IN THIS BID DOCUMENT ARE OFFERED, the bidder must so state and furnish at the time of bid opening, if so requested, and as part of his bid the following information <u>in duplicate</u>:

(a) Complete description of the item offered, and detailed explanation of the differences between the item specified and the item offered. If, in the opinion of the Division of Purchase, sufficient detail is not presented <u>as a part of the sealed bid</u> to permit definitive evaluation of any substitute item, the bid will not be considered.
(b) Descriptive literature of item offered, for evaluation.
(c) List of installations in Erie County of the item offered.
(d) List of other installations.

20. ANY ADDITIONAL INFORMATION for which bidder desires to add to the bid shall be written on a separate sheet of paper, attached to and submitted <u>with the formal sealed bid</u>, to be read at the formal opening.

21. WORKMANSHIP MUST MEET WITH THE APPROVAL OF THE DEPARTMENT HEAD(S) INVOLVED, AND SHALL BE FIRST CLASS in every respect without exception and shall be equal to the best modern practices. Materials furnished are to be new and unused. All materials furnished or work performed are to be guaranteed free from defects. Anything found defective or not meeting specifications, no matter in what stage of completion, may be rejected and shall be made good by the contractor at his own expense.

County of Erie
DIVISION OF PURCHASE

23. THIS BID IS FIRM AND IRREVOCABLE for a period of 45 days from the date and time of the bid opening. If a contract is not awarded within the 45 day period, a bidder to whom the bid has not been awarded, may withdraw his bid by serving written notice of his intention to do so upon the Division of Purchase. Upon withdrawal of the bid pursuant to this paragraph, the Division of Purchase will forthwith return the bidder's security deposit.

24. PRICES CHARGED TO THE COUNTY OF ERIE are to be no higher than those offered to any other governmental or commercial consumer. If a bidder has a New York State or a Federal GSA contract for any of the items covered in this bid or any similar items, he shall so indicate that he has said contract on these bid papers and automatically supply a copy of this contract within five days after notification of award.

25. PRICE IS FIRM. The unit prices bid shall remain firm, and any other charges bid shall also remain firm, for delivery of the equipment, material, work, or services described in this bid. No cost increase shall be charged for any reason whatsoever.

26. EXTENSION OF PRICE PROTECTION. Any contract entered into pursuant to this bid to supply the County's requirements of goods and/or services for a definite period of time as stated in the attached specifications may be extended for not more than two successive periods of equal length at the same bid price upon the mutual agreement of the successful bidder and the County. All extensions shall be submitted in writing and shall have prior approval by the County of Erie, Director of Purchase.

27. IN EXECUTING THIS BID, THE BIDDER AFFIRMS that all of the requirements of the specifications are understood and accepted by the bidder, and that the prices quoted include all required materials and services. The undersigned has checked all of the bid figures, and understands that the County will not be responsible for any errors or omissions on the part of the undersigned in preparing this bid. Mistakes or errors in the estimates, calculations or preparation of the bid shall not be grounds for the withdrawal or correction of the bid or bid security. In case of error in extension of prices in the bid, the unit price will govern.

28. ACCOUNTABILITY. The undersigned shall be fully accountable for his or its performance under this bid, or any contract entered into pursuant to this bid, and agrees that he, or its officers, will answer under oath all questions relevant to the performance thereof and to any transaction, act or omission had, done or omitted in connection therewith if called before any Judicial, County or State officer or agency empowered to investigate the contract or his performance.

29. TERMINATION OF CONTRACT:

a. This agreement may be terminated by either party upon seven (7) days written notice, should the party fail substantially to perform in accordance with its terms, through no fault of the party initiating the termination.

b. At its option, the County may at any time for any reason terminate this agreement and the Contractor shall immediately cease all work under the agreement upon receipt of written notice of such termination from the County.

c. In the event of termination for any reason other than the fault of the Contractor, or the nonavailability of funds as provided in the above Executory Clause, the Contractor shall be paid the amount due to date of termination, and all reasonable expenses caused by such termination.

30.THE SUCCESSFUL BIDDER TO WHOM THE BID IS AWARDED SHALL INDEMNIFY AND HOLD HARMLESS the County of Erie and its agents and employees from and against all claims, damages, losses or causes of action arising out of or resulting from such vendor's performance pursuant to this bid.

31. STATUS AS AN INDEPENDENT CONTRACTOR: The successful Bidder to whom the bid is awarded and the County agree that the Bidder and its officers, employees, agents, contractors, subcontractors and/or consultants are independent contractors and not employees of the County or any department, agency or unit thereof. In accordance with their status as independent contractors, the Bidder covenants and agrees that neither the Bidder nor any of its officers, employees, agents, contractors, subcontractors and/or consultants will hold themselves out as, or claim to be, officers or employees of the County or any department, agency or unit thereof.

32. GOVERNED BY NEW YORK LAW: This Agreement shall be construed and enforced in accordance with the laws of the State of New York. In addition, the parties hereby agree that for any cause of action arising out of this Agreement shall be brought in the County of Erie.

County of Erie

DIVISION OF PURCHASE

To facilitate correct drawing and execution of contract, bidder shall supply full information concerning legal status:

FIRM NAME Visone Construction, Inc.

ADDRESS OF PRINCIPAL OFFICE STREET 79 Sheldon Ave

CITY Depew

AREA CODE 716 PHONE 681-7331 STATE NY ZIP 14043

Check one: CORPORATION X PARTNERSHIP____ INDIVIDUAL____

INCORPORATED UNDER THE LAWS OF THE STATE OF NY

If foreign corporation, state if authorized to do business in the State of New York:

YES ____ NO ____

TRADE NAMES: _____

ADDRESS OF LOCAL OFFICE STREET _____

CITY _____

AREA CODE ____ PHONE _____ STATE _____ ZIP _____

NAMES AND ADDRESSES OF PARTNERS:

_____ _____

_____ _____

_____ _____

_____ _____

EXHIBIT "A"

County of Erie

MARK POLONCARZ
COUNTY EXECUTIVE

DIVISION OF PURCHASE

ASSIGNMENT OF PUBLIC CONTRACTS

GENERAL MUNICIPAL LAW - Section 109:

1. A clause shall be inserted in all specifications of contracts hereafter made or awarded by an officer, board or agency of a political subdivision, or any district therein, prohibiting any contractor, to whom any contract shall be let, granted or awarded, as required by law, from assigning, transferring, conveying, subletting or otherwise disposing of the same, or of his right, title or interest therein, or his power to execute such contract, to any other person or corporation without the previous consent in writing of the officer, board or agency awarding the contract.

2. If any contractor, to whom any contract is let, granted, or awarded, as required by law, by any officer, board or agency of a political subdivision, or of any district therein, without the previous written consent specified in subdivision one (1) of this section, assign, transfer, convey, sublet or otherwise dispose of such contract, or his right, title or interest therein, or his power to execute such contract to any other person or corporation, the officer, board or agency which let, made, granted or awarded such contract shall revoke and annul such contract, and the political subdivision or district therein, as the case may be, and such officer, board or agency shall be relieved and discharged from all liability and obligations growing out of such contract to such contractor, and to the person or corporation to which such contract shall have been assigned, transferred, conveyed, sublet or otherwise disposed of, and such contractor, and his assignee, transferee or sublessee shall forfeit and lose all monies, theretofore earned under such contract, except so much as may be required to pay his employees. The provisions of this section shall not hinder, prevent or affect any assignment by any such contractor for the benefit of his creditors made pursuant to the laws of the State.

NO ASSIGNMENT OF ANY AGREEMENT pursuant to this bid shall be made without specific prior approval, in writing, by the Erie County Director of Purchase.

(Rev. 12/01/93)

ERIE COUNTY OFFICE BUILDING, 95 FRANKLIN STREET, BUFFALO, NEW YORK 14202 (716) 858-6395

COUNTY OF ERIE

MARK POLONCARZ
COUNTY EXECUTIVE

DIVISION OF PURCHASE

PURCHASES BY OTHER LOCAL GOVERNMENTS OR SPECIAL DISTRICTS

he Erie County Legislature has adopted the following resolution for the purpose of allowing the following-named local governmental or chool districts to make purchases through the County bidding procedures.

Under the following conditions, the Director of Purchase may make purchasing services available to the following 88 participants:

When in the opinion of the Director of Purchase it will not create any burden or hardship upon the County and the anticipated prices will not be adversely affected thereby, the Director is authorized when he deems appropriate and as may be requested by the participants n provide in any particular County bid specification that the participants in Erie County shall have the right to make purchases based upon e bids received by the County.

2. The County Purchase Director, within the limits of his time and manpower, shall disseminate relevant contract information to the articipants.

The participants in County contracts will issue purchase orders directly to vendors within the specified contract period referencing the County contract involved and be liable for any payments due on such purchase orders.

dders shall take notice that as a condition of the award of a County contract pursuant to these specifications, the successful bidder grees to accept the award of a similar contract with any of the participants in Erie County if called upon to do so. The County, however, will not be responsible for any debts incurred by participants pursuant to this or any other agreement.

ecessary deviations from the County's specifications in the award of a participant's contract, particularly as such deviations may relate to uantities or delivery point, shall be a matter to be resolved between the successful bidder and participants. All inquiries regarding prospective contracts shall be directed to the attention of:

KRON CENTRAL SCHOOL DISTRICT, District Clerk, 47 Bloomingdale Ave., Akron, NY 14001
KRON VILLAGE OF, Clerk-Treasurer, 21 Main St., Akron, NY 14001
ALDEN CENTRAL SCHOOL DISTRICT, District Clerk, 13190 Park St., Alden, NY 14004
LDEN TOWN OF, Town Clerk, Town Hall, 11901 Broadway, Alden, NY 14004
LDEN VILLAGE OF, Village Clerk, 13336 Broadway, Alden, NY 14004
MHERST CENTRAL SCHOOL DISTRICT, Business Manager , 4301 Main St., Amherst, NY 14226
AMHERST TOWN OF, Highway Superintendent, Town Hall, 5583 Main St., Williamsville, NY 14221
MHERST TOWN OF, Town Supervisor, Town Hall, 5583 Main St., Williamsville, NY 14221
NGOLA VILLAGE OF, Clerk-Treasurer, 41 Commercial St., Angola, NY 14006
AURORA TOWN OF, Town Clerk, Town Hall, 5 S. Grove St., E. Aurora, NY 14052
BLASDELL VILLAGE OF, Clerk-Treasurer, 121 Miriam St., Blasdell, NY 14219
OCES, ERIE #1, Clifford N Crooks Svc. Ctr., 355 Harlem Rd. West Seneca NY 14224-1892
OCES, ERIE CATTARAUGUS #2, Assistant Superintendent, 3340 Baker Rd., Orchard Park, NY 14127
BOSTON TOWN OF, Town Clerk, Town Hall, 8500 Boston State Rd., Boston, NY 14025
BRANT TOWN OF, Town Clerk, Town Hall, Brant North Collins Rd., Brant, NY 14027
UFFALO BOARD OF EDUCATION, Purchasing Agent, 408 City Hall, Buffalo, NY 14202
UFFALO CITY OF, Division of Purchasing, 1901 City Hall, Buffalo, NY 14202
BUFFALO SEWER AUTHORITY, General Manager, 1038 City Hall, Buffalo, NY 14202-3378
CHEEKTOWAGA CENTRAL SCHOOL DISTRICT, 3600 Union Rd., Cheektowaga, NY 14225
HEEKTOWAGA-MARYVALE UNION FREE SCHOOL DIST., DIST., CLERK, 1050 MARYVALE DR., CHEEKTOWAGA, NY 14225-2386
HEEKTOWAGA-SLOAN UNION FREE SCHOOL DISTRICT, District Clerk, 166 Halstead Ave., Sloan, NY 14212-2295
CHEEKTOWAGA TOWN OF, Town Hall, Broadway & Union Rds., Cheektowaga, NY 14227
CLARENCE CENTRAL SCHOOL DISTRICT,Business Administrator, 9625 Main St., Clarence, NY 14031-2083
LARENCE TOWN OF, Town Clerk, 1 Town Place, Clarence, NY 14031

CLEVELAND HILL FIRE DISTRICT NO. 6, Secretary, 440 Cleveland Dr., Cheektowaga, NY 14225
CLEVELAND HILL U.F.S.D. @ CHEEKTOWAGA, Business Manager, Mapleview Dr., Cheektowaga, NY 14225
COLDEN TOWN OF, Deputy Town Clerk, Town Hall, S-8812 State Rd., Colden, NY 14033
COLLINS TOWN OF, Supervisor, Town Hall, P.O. Box 420, Collins, NY 14035
CONCORD TOWN OF, Town Clerk, Town Hall, Springville, NY 14141-0187
DEPEW UNION FREE SCHOOL DISTRICT, District Clerk, 591 Terrace Blvd., Depew, NY 14043
DEPEW VILLAGE OF, Village Clerk, Municipal Building, 85 Manitou St., Depew, NY 14043
EAST AURORA VILLAGE OF, Village Clerk, Village Hall, 571 Main St., East Aurora, NY 14052
EDEN TOWN OF, Town Clerk, 2795 East Church St., Eden, NY 14057
EGGERTSVILLE FIRE DISTRICT, Secretary/Treasurer, 1880 Eggert Rd., Eggertsville, NY 14226-2233
ELLWOOD FIRE DISTRICT #1, Secretary, Town of Tonawanda, 1000 Englewood Ave., Kenmore, NY 14223
ELMA TOWN OF, Town Clerk, Town Hall, 1600 Bowen Rd., Elma, NY 14059
ERIE COUNTY WATER AUTHORITY, Central Processing, 3030 Union Rd., Buffalo, NY 14227
EVANS TOWN OF, Town Clerk, 42 N. Main St., Angola, NY 14006
FARNHAM VILLAGE OF, Village Clerk-Treasurer, 526 Commercial St., Farnham, NY 14061
FORKS FIRE DISTRICT #3, Commissioner, Town Cheektowaga, 3330 Broadway, Cheektowaga, NY 14227
GOWANDA VILLAGE OF, Clerk/Treasurer, 27 East Main St., Gowanda, NY 14070
GRAND ISLAND CENTRAL SCHOOL DISTRICT, District Clerk, 1100 Ransom Rd, Grand Island, NY 14072
GRAND ISLAND TOWN OF, Town Clerk, 2255 Baseline Rd., Grand Island, NY 14072
HAMBURG TOWN OF, Town Clerk, S-6100 S. Park Ave., Hamburg, NY 14075
HAMBURG VILLAGE OF, Village Clerk/Treasurer, 100 Main St., Hamburg, NY 14075
HOLLAND FIRE DISTRICT #1, Town of Holland, Holland, NY 14080
HOLLAND TOWN OF, Town Clerk, 47 Pearl St., Holland, NY 14080
HOPEVALE UNION FREE SCHOOL DISTRICT, District Clerk, 3780 Howard Rd., Hamburg, NY 14075
IROQUOIS CENTRAL SCHOOL DISTRICT, Gridle Rd., Elma, NY 14059
KENILWORTH FIRE DISTRICT #2, Commissioner, Tn. Tonawanda, 84 Hawthorne Ave., Buffalo, NY 14223
KENMORE-TN OF TONAWANDA UNION FREE SCHOOL DISTRICT, district Clerk, 1500 Colvin Blvd., Buffalo, NY 14223
KENMORE VILLAGE OF, Village Clerk-Treasurer, Municipal Building, Kenmore, NY 14217
LACKAWANNA CITY OF, City Clerk, Lackawanna City Hall, 714 Ridge Rd., Lackawanna, NY 14218
LAKE VIEW FIRE DISTRICT, Fire Commissioner, P.O. Box 145, Lake View, NY 14085
LANCASTER TOWN OF, Town Clerk, 21 Central Avenue, Lancaster, NY 14086
LANCASTER VILLAGE OF, Clerk-Treasurer, Municipal Building, 5423 Broadway, Lancaster, NY 14086
MARILLA TOWN OF, Marilla Town Hall, 1740 Two Rod Rd., Marilla, NY 14102
NEWSTEAD TOWN OF, Town Clerk, Town Hall, P.O. Box 227, Akron, NY 14001
NIAGARA FRONTIER TRANSPORTATION AUTHORITY, 181 Ellicott St., Buffalo, NY 14205
NORTH COLLINS TOWN OF, Town Clerk 2015 Spruce St., North Collins, NY 14111
NORTH COLLINS VILLAGE OF, Village Clerk, 10543 Main St., North Collins, NY 14111
ORCHARD PARK CENTRAL SCHOOL DIST, Asst. Supt. Bus. & Support Svcs, 3330 Baker Rd, Orchard Park, NY 14127
ORCHARD PARK TOWN OF, Town Clerk, Municipal Bldg., 4295 S. Buffalo St., Orchard Park, NY 14127
ORCHARD PARK VILLAGE OF, Clerk, Municipal Bldg., 4295 S. Buffalo St., Orchard Park, NY 14127
SARDINIA TOWN OF, Town Clerk, Town Hall, Savage Rd., Sardina, NY 14134
SHERIDAN PARK FIRE DISTRICT NO. 4, Secretary, 738 Sheridan Dr., Tonawanda, NY 14150
SLOAN VILLAGE OF, Clerk Treasurer, 425 Reiman St., Sloan, NY 14212
SNYDER VOL. FIRE DEPT., Fire Commissioner, 4531 Main Street, Snyder, NY 14226
SOUTH LINE FIRE DISTRICT #10, Fire Commissioner, 1049 S. French Rd., S. Cheektowaga, NY 14227
SOUTH WALES FIRE DISTRICT #1, Secretary/Treasurer, P.O.Box 94, South Wales, NY 14139
SPRING BROOK FIRE DISTRICT #1, Secretary, P.O. Box 97, Spring Brook, NY 14140
SPRINGVILLE VILLAGE OF, Clerk Treasurer, Village Office, 5 W. Main St., Springville, NY 14141
SWEET HOME CENTRAL SCHOOL DISTRICT, Dir. Finance & Plant Svcs. 1901 Sweet Home Rd, Amherst, NY 14228
TONAWANDA CITY OF, Mayor, 200 Niagara St., Tonawanda, NY 14150
TONAWANDA CITY OF, Superintendent, 150 Fillmore Avenue,Tonawanda, NY 14150
TONAWANDA CITY SCHOOL DISTRICT, DISTRICT CLERK, 202 BROAD ST., TONAWANDA, NY 14150-2098
TONAWANDA TOWN OF, Town Clerk, Municipal Building, Kenmore, NY 14217
U-CREST FIRE DISTRICT #4, Fire Commissioner, 255 Clover Place, Cheektowaga, NY 14225
UNION FREE SCHOOL DISTRICT, Dist. Clerk, Tn. Tonawanda, 1500 Colvin Blvd., Kenmore, NY 14223
WALDEN FIRE DISTRICT #2, 20 Pine Ridge Road, Fire Commissioner, Cheektowaga, NY 14211
WALES TOWN OF, Town Clerk, Big Tree Rd., Wales Center, NY 14169
WEST SENECA CENTRAL SCHOOL DIST, district Treasurer, 1397 Orchard Park Rd., W. Seneca B Y 14224-4098
WEST SENECA FIRE DISTRICT #4, Fire Commissioner, 100 Lein Rd., West Seneca, NY 14224
WEST SENECA FIRE DISTRICT #5, Fire Commissioner, 2801 Seneca St., West Seneca, NY 14224
WEST SENECA TOWN OF, Town Clerk, 1250 Union Road, West Seneca, NY 14224
WILLIAMSVILLE, CTRAL SCHOOL DIST., DIST., CLERK, 105 Casey Rd, PO Box 5000, E Amherst NY 14051
WILLIAMSVILLE VILLAGE OF, 5565 Main St., P.O. Box 1557, Williamsville, NY 14231-1557
WYOMING, COUNTY OF,Office of the Board of Supervisors, 143 N. Main St., Warsaw, NY 14569
REV. 2-06

County of Erie

MARK POLONCARZ
COUNTY EXECUTIVE
DIVISION OF PURCHASE

CONSTRUCTION/RECONSTRUCTION CONTRACTS

1. DISCRIMINATION. The successful bidder agrees:

(a) that in the hiring of employees for the performance of work under this contract or any subcontract hereunder, no contractor, subcontractor, nor any person acting on behalf of such contractor or subcontractor, shall by reason of race, creed, color, sex or national origin discriminate against any citizen of the State of New York who is qualified and available to perform the work to which the employment relates;

(b) that no contractor, subcontractor, nor any person on his behalf shall, in any manner, discriminate against or intimidate any employee hired for the performance of work under this contract on account of race, creed, color, sex or national origin;

(c) that there may be deducted from the amount payable to the contractor by the County of Erie under this contract a penalty of fifty dollars for each person for each calendar day during which such person was discriminated against or intimidated in violation of the provisions of the contract;

(d) that this contract may be cancelled or terminated by the County of Erie and all monies due or to become due hereunder may be forfeited, for a second or any subsequent violation of the terms or conditions of this section of the contract; and

(e) the aforesaid provisions of this section covering every contract for or on behalf of the County of Erie for the manufacture, sale or distribution of materials, equipment or supplies shall be limited to operations performed within the territorial limits of the State of New York.
(N.Y. State Labor Law Article 8 Section 220-e)

(f) Provisions of the State Law Against Discrimination also prohibit discrimination in employment because of age.

2. CONSTRUCTION, RECONSTRUCTION, OR REPAIR CONTRACTS FOR PUBLIC WORKS FACILITIES are subject to minimum wage rates, as established by the State of New York Department of Labor. The successful bidder on any contract for public works to which the provisions of the New York State Labor Law Article 8 apply agrees that:

(a) No laborer, workman or mechanic in the employ of the contractor, subcontractor or other person doing or contracting to do the whole or a part of the work contemplated by the contract shall be permitted or required to work more than eight hours in any one calendar day or more than five days in any one week except in cases of extraordinary emergency including fire, flood or danger to life or property.
(Section 220, subd. 2, N.Y. State Labor Law)

(b) Each laborer, workman or mechanic employed by the contractor, subcontractor or other person doing or contracting to do the whole or part of the work contemplated by the contract shall be paid not less than the hourly minimum rate of wage and provided supplements not less than the prevailing supplements as designated by the New York State Industrial Commission.
(Section 220, subd. 3, N.Y. State Labor Law)

Wage and supplement rates are on file in the Division of Purchase.

3. AFFIRMATIVE ACTION PROGRAM AFFECTING CONSTRUCTION CONTRACTS. The Erie County Legislature has adopted a resolution directing that County Construction Contracts require the contractor to take affirmative action to secure equal opportunity for minority group workers and to comply with the Affirmative Action Program of the County of Erie. The Legislative resolution provides that a contract for the purchase of equipment involving installation work by building trade employees shall be considered a construction contract if the number of such employees on the job site shall at any time exceed ten (10). If the contractor intends to have more than ten (10) such employees on the job site at any one time, it shall be the contractor's obligation to make a written request to the Director of the Division of Purchase
for a copy of the special conditions pertaining to affirmative action. The contractor shall not, at any time, place more than ten (10) such employees on the job site except in compliance with the said resolution and the said special conditions.

EXHIBIT "G"

County of Erie

DIVISION OF PURCHASE

NON-COLLUSIVE BIDDING CERTIFICATION

By submission of this bid, each bidder and each person signing on behalf of any bidder certifies, and in the case of a joint bid each party thereto certifies as to its own organization, under penalty of perjury, that to the best of his knowledge and belief:

(1) the prices in this bid have been arrived at independently without collusion, consultation, communication, or agreement, for the purpose of restricting competition, as to any matter relating to such prices with any other bidder or any competitor;

(2) unless otherwise required by law, the prices which have been quoted in this bid have not been knowingly disclosed by the bidder and will not knowingly be disclosed by the bidder prior to opening, directly or indirectly, to any other bidder or to any competitor; and

(3) no attempt has been made or will be made by the bidder to induce any other person, partnership or corporation to submit or not to submit a bid for the purpose of restricting competition.

NOTICE

(Penal Law, Section 210.45)

IT IS A CRIME, PUNISHABLE AS A CLASS A MISDEMEANOR UNDER THE LAWS OF THE STATE OF NEW YORK, FOR A PERSON, IN AND BY A WRITTEN INSTRUMENT, TO KNOWINGLY MAKE A FALSE STATEMENT, OR TO MAKE A FALSE STATEMENT, OR TO MAKE A STATEMENT WHICH SUCH PERSON DOES NOT BELIEVE TO BE TRUE.

BID NOT ACCEPTABLE WITHOUT FOLLOWING CERTIFICATION:

Affirmed under penalty of perjury this 27th day of July, 20 17

TERMS _____ DELIVERY DATE AT DESTINATION _____

FIRM NAME Visone Construction, Inc.

ADDRESS 79 Sheldon Ave

Depew NY ZIP 14043

AUTHORIZED SIGNATURE [signature]

TYPED NAME OF AUTHORIZED SIGNATURE Dave Visone

TITLE President TELEPHONE NO. 716.681.7331

(Rev.1/2000)

ERIE COUNTY OFFICE BUILDING, 95 FRANKLIN STREET, BUFFALO, NEW YORK 14202 (716) 858-6395

EXHIBIT "PW"

NEW YORK STATE PREVAILING WAGE

*On contracts which are subject to New York Department of Labor Prevailing Wage laws and regulations, the contractor is required to submit certified payroll record every thirty (30) days after the issuance of your first payroll under this contract. Required forms are available at the New York Department of Labor's website https://www.labor.state.ny.us/formsdocs/wp/pw12.pdf.

This project's PRC# 2017006661.

In addition, if applicable, contractor is required to attach a copy of proof of completion of the OSHA 10 course to the first certified payroll submitted and on each succeeding payroll where any new or additional employee is first listed.

Records are to be submitted as directed in your award letter.

Failure to submit the legally required records will result in delayed payments.

Division of Purchase

EEO Compliance Place Card

****

Date Sent 8 / 18 / 17

Buyer JK

Bid # 217204-002

Bid Title Sewer Repair

Comments

EEO Sign-off [signature] Date 8/29/2017

BID WILL NOT BE CONSIDERED IF THIS FORM IS NOT SUBMITTED WITH BID AS REQUIRED, REGARDLESS OF THE BID AMOUNT.

BID NO.: 217204-002
BID DATE: 7-27-17

ERIE COUNTY MINORITY/ WOMEN BUSINESS ENTERPRISE UTILIZATION REPORT - PART A

COMPANY: Visone Construction, Inc.
AUTHORIZED REPRESENTATIVE: Dave Visone
ADDRESS: 79 Sheldon Ave Depew NY 14043
TELEPHONE NUMBER: (716) 681.7331
BID NAME: Erie County DSM ECSD No. 1,2,3,4,5,6,8 Contract No. 7c

I. List actions taken to identify, solicit, and contact Minority Business Enterprises (MBE)/Women Business Enterprises (WBE) to bid on subcontracts for this project.

1. Phone call
2.
3.
4.
5.
6.

II. List all bona fide Minority/Women Business Enterprise subcontractors and suppliers solicited, contracted, or presently negotiating a contract in accordance with the minority business utilization goal set forth by the County of Erie. (Attach additional sheets if necessary.)

MBE/WBE OWNED FIRMS	SUPPLY/SERVICE	AMOUNT OF PROPOSAL	PRIOR CERTIFICATION	CONTRACT EXECUTED	REASON IF CONTRACT NOT AWARDED
Name: Pavilion Drainage Address: Box 219 Pavilion NY 14525 Telephone No. 585.584.3216 IRS #	Supply	8,000.00	MBE	YES ____ NO X	proposal
Name: Strock Contracting Address: 581 N. Blossom Telephone No. 253.1660 IRS #	Service	5,000.00	MBE	YES ____ NO X	proposal

MBE/WBE OWNED FIRMS	SUPPLY/SERVICE	AMOUNT OF PROPOSAL	PRIOR CERTIFICATION	CONTRACT EXECUTED	REASON IF CONTRACT NOT AWARDED
Name: CVF Concrete Address: 100 Burkhart Telephone No. 836.1673 IRS #	Supply/Ser WBE	13,200.00		YES ____ NO X	proposal
Name: Proguois Bar Address: Telephone No. IRS #	Service MBE	5,000.00		YES ____ NO X	proposal
Name: Address: Telephone No. IRS #				YES ____ NO ____	

III. Total Dollar Amount to be subcontracted to
Minority Business Enterprise(s). $ 18,000.00
Women Business Enterprise(s). $ 13,200.00

IV. Total Amount of Bid $ 31,200.00

V. MBE Percent (%) of project bid % .008 57.6%
WBE Percent (%) of project bid % .006

VI. YOU MUST ATTACH COPIES OF RELEVANT CORRESPONDENCE AND DOCUMENTS, INCLUDING RETURN RECEIPTS.

SIGNATURE OF AUTHORIZED REPRESENTATIVE 7/27/17 DATE

(01/09)

PRIME CONTRACTOR AFFIDAVIT

- According to the best of my knowledge, I certify that all the following statements are true and accurate and are made under penalty of perjury. I agree to comply with Executive order 11246, New York State Article 15-A of the Executive Law, and Erie County Local Law Nos. 1 & 5 to achieve Minority and Women Business Enterprise goals assigned to this contract.
- I understand that only Erie County/City of Buffalo certified MBE & WBE owned and operated business enterprises will be credited towards fulfillment of the MBE & WBE utilization goals on this construction project.
- I will make every good faith effort to meet the MBE/WBE utilization goals in which contained in the contract.
- I affirm that I have no direct or indirect control over any MBE/WBE which I propose to use in fulfillment of the MBE/WBE utilization goals of this contract.
- I understand that I will not meet the MBE/WBE goal through arrangements with minority/female individuals of firms, which are not certified as participating minority business enterprises or women business enterprises.
- I understand and acknowledge that I will not perform any services and functions to such an extent that the MBE/WBE owner/operator does not manage and control its company
- I will only utilize MBE & WBE subcontractors and/or suppliers who are certified with Erie County/City of Buffalo.
- I understand that I am responsible for ensuring that MBE & WBE firms are utilized in order to further utilization goals. I understand that failure to utilize MBE & WBE firms are represented herein, will constitute a material breach of contract.
- The MBE/WBE firm will perform all the work and/or supply all the material covered under the prime contractor and subcontractor agreement. If change occurs, it is the prime contractor's responsibility to notify Erie County-EEO Office within 2 weeks.
- I understand that I will not withhold any payments that I agree on with MBE & WBE upon completion of the project.
- I understand that any misrepresentation of fact in this affidavit may lead to criminal prosecution under State and Federal law.
- The percentage (%) of MBE utilization goals for this contract is 10%
- The percentage (%) of WBE utilization goals for this contract is 2%.

7-27-17
Date

Visone Construction, Inc.
Name of Company

79 Sheldon Ave Depew NY 14043
Address

716-681-7331
Telephone No.

Authorized Signature

Sworn to me this 26 day of July 20 17

Christine J. Kempski (Signature of Notary)

CHRISTINE J. KEMPSKI
Notary Public, State of New York
Qualified in Erie County
My Commission Expires 11/20/20 18

AGREEMENT TO ABIDE BY EQUAL EMPLOYMENT OPPORTUNITY POLICY STATEMENT REQUIREMENTS

I, Dave Visone, am the authorized representative of Visone Construction, Inc
Name of Representative — Name of Contractor/Service Provider

I hereby certify that Visone Construction, Inc will abide by the equal employment opportunity (EEO) policy statement provisions outlined below.
Name of Contractor/Service Provider

(i) A statement that the contractor will not discriminate on the basis of race, creed, color, national origin, sex, age, disability, or marital status against any employee or applicant for employment, will undertake or continue existing programs of affirmative action to ensure that minority group members and women are afforded equal employment opportunities without discrimination and will make and document its conscientious and active efforts to employ and utilize minority group members and women in its work force on contracts relating to the Project.

(ii) An agreement that all of contractor's solicitations or advertisements for employees will state that, in the performance of the contract relating to this Project, all qualified applicants will be afforded equal employment opportunities without discrimination on the basis of race, creed, color, national origin, sex, age, disability or marital status.

(iii) An agreement to request each employment agency, labor union, or authorized representative of workers with which it has a collective bargaining or other agreement or understanding, to furnish a written statement that such employment agency, labor union, or representative will not discriminate on the basis of race, creed, color, national origin, sex, age, disability or marital status and that such union or representative will affirmatively cooperate in the implementation of the contractor's obligations herein.

(iv) An agreement to comply with the provisions of the Human Rights Law (Article 15 of the Executive Law), including those relating to non-discrimination on the basis of prior criminal conviction and prior arrest, and with all other State and federal statutory constitutional non-discrimination provisions.

Blank EEO Policy Statements are available at www.efc.ny.gov/mwbe, if needed.

If contractor fails to submit to Recipient an EEO policy statement consistent with the provisions set forth above in clauses (i), (ii), (iii) and (iv) and within the timeframe required thereof, Recipient may declare this contract to be null and void.

X _____

Contractor/Service Provider Representative

VISO-01 OP ID: BS

CERTIFICATE OF LIABILITY INSURANCE

DATE (MM/DD/YYYY) 03/13/2017

THIS CERTIFICATE IS ISSUED AS A MATTER OF INFORMATION ONLY AND CONFERS NO RIGHTS UPON THE CERTIFICATE HOLDER. THIS CERTIFICATE DOES NOT AFFIRMATIVELY OR NEGATIVELY AMEND, EXTEND OR ALTER THE COVERAGE AFFORDED BY THE POLICIES BELOW. THIS CERTIFICATE OF INSURANCE DOES NOT CONSTITUTE A CONTRACT BETWEEN THE ISSUING INSURER(S), AUTHORIZED REPRESENTATIVE OR PRODUCER, AND THE CERTIFICATE HOLDER.

IMPORTANT: If the certificate holder is an ADDITIONAL INSURED, the policy(ies) must be endorsed. If SUBROGATION IS WAIVED, subject to the terms and conditions of the policy, certain policies may require an endorsement. A statement on this certificate does not confer rights to the certificate holder in lieu of such endorsement(s).

PRODUCER
Vanner Insurance Agency
11 Pinchot Court, Suite 100
Amherst, NY 14228
Ralph James Vanner, Jr.

CONTACT NAME: Ralph James Vanner, Jr.
PHONE (A/C, No, Ext): 716-688-8888 FAX (A/C, No): 716-688-9001
E-MAIL ADDRESS: rvanner@vannerinsurance.com

INSURER(S) AFFORDING COVERAGE	NAIC #
INSURER A: The Phoenix Insurance Company	25623
INSURER B: Travelers Indemnity Co of CT	25682
INSURER C: Charter Oak Fire Insurance Com	25615
INSURER D: ACE American Insurance Company	22667
INSURER E:	
INSURER F:	

INSURED
Visone Construction Inc
79 Sheldon Avenue
Depew, NY 14043

COVERAGES CERTIFICATE NUMBER: REVISION NUMBER:

THIS IS TO CERTIFY THAT THE POLICIES OF INSURANCE LISTED BELOW HAVE BEEN ISSUED TO THE INSURED NAMED ABOVE FOR THE POLICY PERIOD INDICATED. NOTWITHSTANDING ANY REQUIREMENT, TERM OR CONDITION OF ANY CONTRACT OR OTHER DOCUMENT WITH RESPECT TO WHICH THIS CERTIFICATE MAY BE ISSUED OR MAY PERTAIN, THE INSURANCE AFFORDED BY THE POLICIES DESCRIBED HEREIN IS SUBJECT TO ALL THE TERMS, EXCLUSIONS AND CONDITIONS OF SUCH POLICIES. LIMITS SHOWN MAY HAVE BEEN REDUCED BY PAID CLAIMS.

INSR LTR	TYPE OF INSURANCE	ADDL INSR	SUBR WVD	POLICY NUMBER	POLICY EFF (MM/DD/YYYY)	POLICY EXP (MM/DD/YYYY)	LIMITS	
C	GENERAL LIABILITY X COMMERCIAL GENERAL LIABILITY CLAIMS-MADE X OCCUR X Blkt Contractual X XCU GEN'L AGGREGATE LIMIT APPLIES PER: POLICY X PRO-JECT LOC	X	X	DTCO4F235140COF17	03/01/2017	03/01/2018	EACH OCCURRENCE DAMAGE TO RENTED PREMISES (Ea occurrence) MED EXP (Any one person) PERSONAL & ADV INJURY GENERAL AGGREGATE PRODUCTS - COMP/OP AGG Emp Ben.	$ 1,000,000 $ 300,000 $ 5,000 $ 1,000,000 $ 2,000,000 $ 2,000,000 $ 1/2
A	AUTOMOBILE LIABILITY X ANY AUTO ALL OWNED AUTOS SCHEDULED AUTOS HIRED AUTOS NON-OWNED AUTOS	X	X	DT8104F236140PHX17	03/01/2017	03/01/2018	COMBINED SINGLE LIMIT (Ea accident) BODILY INJURY (Per person) BODILY INJURY (Per accident) PROPERTY DAMAGE (PER ACCIDENT)	$ 1,000,000 $ $ $ $
D	X UMBRELLA LIAB X OCCUR EXCESS LIAB CLAIMS-MADE DED X RETENTION $ 10,000	X	X	N06571360004	03/01/2017	03/01/2018	EACH OCCURRENCE AGGREGATE	$ 5,000,000 $ 5,000,000 $
B	WORKERS COMPENSATION AND EMPLOYERS' LIABILITY ANY PROPRIETOR/PARTNER/EXECUTIVE OFFICER/MEMBER EXCLUDED? Y/N (Mandatory in NH) If yes, describe under DESCRIPTION OF OPERATIONS below	N/A	X	DTEUB3E98827316	12/31/2016	12/31/2017	WC STATU-TORY LIMITS OTH-ER E.L. EACH ACCIDENT E.L. DISEASE - EA EMPLOYEE E.L. DISEASE - POLICY LIMIT	$ 100,000 $ 100,000 $ 500,000
A	Leased Equipment			QT660OH954889PHX17	03/01/2017	03/01/2018	Limit/Ded	250000/1000
A	Install/Bldrs Risk			QT660OH954889PHX17	03/01/2017	03/01/2018	Limit	2,500,000

DESCRIPTION OF OPERATIONS / LOCATIONS / VEHICLES (Attach ACORD 101, Additional Remarks Schedule, if more space is required)

County of Erie and any Board, Bureau, Commission or Agency as additional insureds on a primary and non-contributory basis and Waiver of Subrogation applies in their favor.

ORIGINAL DOCUMENT

MAR 13 2017
IN LAW DEPARTMENT

CERTIFICATE HOLDER

ERIE000

County of Erie
95 Franklin St
Buffalo, NY 14202

CANCELLATION

SHOULD ANY OF THE ABOVE DESCRIBED POLICIES BE CANCELLED BEFORE THE EXPIRATION DATE THEREOF, NOTICE WILL BE DELIVERED IN ACCORDANCE WITH THE POLICY PROVISIONS.

AUTHORIZED REPRESENTATIVE

© 1988-2010 ACORD CORPORATION. All rights reserved.

The ACORD name and logo are registered marks of ACORD

STATE OF NEW YORK
WORKERS' COMPENSATION BOARD

CERTIFICATE OF NYS WORKERS' COMPENSATION INSURANCE COVERAGE

1a. Legal Name & Address of Insured (Use street address only) Visone Construction Inc 79 Sheldon Avenue Depew, NY 14043 **Work Location of Insured** ***(Only required if coverage is specifically limited to certain locations in New York State, i.e., a Wrap-Up Policy)***	**1b. Business Telephone Number of Insured** 716-681-7331 **1c. NYS Unemployment Insurance Employer Registration Number of Insured** 42-42474 **1d. Federal Employer Identification Number of Insured or Social Security Number** 161320950
2. Name and Address of the Entity Requesting Proof of Coverage (Entity Being Listed as the Certificate Holder) County of Erie 95 Franklin Street Buffalo, NY 14202 ORIGINAL DOCUMENT MAR 13 2017 IN LAW DEPARTMENT	**3a. Name of Insurance Carrier** The Travelers Indemnity Company **3b. Policy Number of entity listed in box "1a"** DTKUB3E98827316 **3c. Policy effective period** 12/31/2016 to 12/31/2017 **3d. The Proprietor, Partners or Executive Officers are** ☑ **included.** **(Only check box if all partners/officers included)** ☐ **all excluded or certain partners/officers excluded.**

This certifies that the insurance carrier indicated above in box "3" insures the business referenced above in box "1a" for workers' compensation under the New York State Workers' Compensation Law. **(To use this form, New York (NY) must be listed under Item 3A on the INFORMATION PAGE of the workers' compensation insurance policy).** The Insurance Carrier or its licensed agent will send this Certificate of Insurance to the entity listed above as the certificate holder in box "2".

The Insurance Carrier will also notify the above certificate holder within 10 days IF a policy is canceled due to nonpayment of premiums or within 30 days IF there are reasons other than nonpayment of premiums that cancel the policy or eliminate the insured from the coverage indicated on this Certificate. (These notices may be sent by regular mail.) Otherwise, this Certificate is valid for one year after this form is approved by the insurance carrier or its licensed agent, or until the policy expiration date listed in box "3c", whichever is earlier.

Please Note: Upon the cancellation of the workers' compensation policy indicated on this form, if the business continues to be named on a permit, license or contract issued by a certificate holder, the business must provide that certificate holder with a new Certificate of Workers' Compensation Coverage or other authorized proof that the business is complying with the mandatory coverage requirements of the New York State Workers' Compensation Law.

Under penalty of perjury, I certify that I am an authorized representative or licensed agent of the insurance carrier referenced above and that the named insured has the coverage as depicted on this form.

Approved by: Ralph J. Vanner, Jr., CPCU
(or licensed agent of insurance carrier)

Approved by: [signature] 03/13/17
(Signature) (Date)

Title: ——

Telephone Number of authorized representative or licensed agent of insurance carrier: (716)688-8888

Please Note: Only insurance carriers and their licensed agents are authorized to issue Form C-105.2. Insurance brokers are NOT authorized to issue it.

Workers' Compensation Law

Section 57. Restriction on issue of permits and the entering into contracts unless compensation is secured.

1. The head of a state or municipal department, board, commission or office authorized or required by law to issue any permit for or in connection with any work involving the employment of employees in a hazardous employment defined by this chapter, and notwithstanding any general or special statute requiring or authorizing the issue of such permits, shall not issue such permit unless proof duly subscribed by an insurance carrier is produced in a form satisfactory to the chair, that compensation for all employees has been secured as provided by this chapter. Nothing herein, however, shall be construed as creating any liability on the part of such state or municipal department, board, commission or office to pay any compensation to any such employee if so employed.

2. The head of a state or municipal department, board, commission or office authorized or required by law to enter into any contract for or in connection with any work involving the employment of employees in a hazardous employment defined by this chapter, notwithstanding any general or special statute requiring or authorizing any such contract, shall not enter into any such contract unless proof duly subscribed by an insurance carrier is produced in a form satisfactory to the chair, that compensation for all employees has been secured as provided by this chapter.

STATE OF NEW YORK
WORKERS' COMPENSATION BOARD

CERTIFICATE OF INSURANCE COVERAGE UNDER THE NYS DISABILITY BENEFITS LAW

PART 1. To be completed by Disability Benefits Carrier or Licensed Insurance Agent of that Carrier

1a. Legal Name and Address of Insured (Use street address only) VISONE CONSTRUCTION INC 79 SHELDON AVENUE DEPEW, NY 14043 Work Location Of Insured (Only required If coverage Is specifically limited To certain locations In New York State, i.e., a Wrap-Up Policy)	1b. Business Telephone Number Of Insured 1c. NYS Unemployment Insurance Employer Registration Number of Insured 1d. Federal Employer Identification Number of Insured or Social Security Number 16-1320950
2. Name and Address of the Entity Requesting Proof of Coverage (Entity Being Listed as the Certificate Holder) County of Erie 95 Franklin Street Buffalo, NY 14202 ORIGINAL DOCUMENT MAR 13 2017 IN LAW DEPARTMENT	3a. Name of Insurance Carrier WESCO INSURANCE COMPANY 3b. Policy Number of entity listed in box "1a.": 0233092 3c. Policy effective period: 3/13/2017 to 12/31/2018

4. Policy covers:
a. ☒ All of the employer's employees eligible under the New York Disability Benefits Law
b. ☐ Only the following class or classes of the employer's employees: _____

Under penalty of perjury, I certify that I am an authorized representative or licensed agent of the insurance carrier referenced above and that the named insured has NYS Disability Benefits insurance coverage as described above.

Date Signed 3/13/2017 By Kathleen DeZia
(Signature of insurance carrier's authorized representative or NYS Licensed Insurance Agent of that insurance carrier)

Telephone Number 800-535-2711 Title Vice President

IMPORTANT: If box "4a" is checked, and this form is signed by the insurance carrier's authorized representative or NYS Licensed Insurance Agent of that carrier, this certificate is COMPLETE. Mail it directly to the certificate holder.
If box "4b" is checked, this certificate is NOT COMPLETE for purposes of Section 220, Subd. 8 of the Disability Benefits Law. It must be mailed for completion to the Workers' Compensation Board, DB Plans Acceptance Unit, 328 State Street, Schenectady, NY 12305.

PART 2. To be completed by NYS Workers' Compensation Board (Only if box "4b" of Part 1 has been checked)

State of New York
Workers' Compensation Board

According to information maintained by the NYS Workers' Compensation Board, the above-named employer has complied with the NYS Disability Benefits Law with respect to all of his/her employees.

Date Signed _____ By _____
(Signature of NYS Workers' Compensation Board Employee)

Telephone Number _____ Title _____

Please Note: Only insurance carriers licensed to write NYS disability benefits insurance policies and NYS licensed insurance agents of those insurance carriers are authorized to issue Form DB-120.1. **Insurance brokers are NOT authorized to issue this form.**

DB-120.1 (9-15)

Additional Instructions for Form DB-120.1

By signing this form, the insurance carrier identified in box "3" on this form is certifying that it is insuring the business referenced in box "1a" for disability benefits under the New York State Disability Benefits Law. The Insurance Carrier or its licensed agent will send this Certificate of Insurance to the entity listed as the certificate holder in box "2".

Will the carrier notify the certificate holder within 10 days of a policy being cancelled for non-payment of premium or within 30 days if cancelled for any other reason or if the insured is otherwise eliminated from the coverage indicated on this certificate prior to the end of the policy effective period? ☐ YES ☒ NO

This certificate is issued as a matter of information only and confers no rights upon the certificate holder. This certificate does not amend, extend or alter the coverage afforded by the policy listed, nor does it confer any rights or responsibilities beyond those contained in the referenced policy.

This certificate may be used as evidence of a Disability Benefits contract of insurance only while the underlying policy is in effect.

Please Note: Upon the cancellation of the disability benefits policy indicated on this form, if the business continues to be named on a permit, license or contract issued by a certificate holder, the business must provide that certificate holder with a new Certificate of NYS Disability Benefits Coverage or other authorized proof that the business is complying with the mandatory coverage requirements of the New York State Disability Benefits Law.

DISABILITY BENEFITS LAW

§220. Subd. 8

(a) The head Of a state Or municipal department, board, commission Or office authorized Or required by law To issue any permit For Or In connection With any work involving the employment Of employees In employment As defined In this article, And Not withstanding any general Or special statute requiring Or authorizing the issue Of such permits, shall Not issue such permit unless proof duly subscribed by an insurance carrier Is produced In a form satisfactory To the chair, that the payment Of disability benefits For all employees has been secured As provided by this article. Nothing herein, however, shall be construed As creating any liability On the part Of such state Or municipal department, board, commission Or office To pay any disability benefits To any such employee If so employed.

(b) The head Of a state Or municipal department, board, commission Or office authorized Or required by law To enter into any contract For Or In connection With any work involving the employment Of employees In employment As defined In this article, And notwithstanding any general Or special statute requiring Or authorizing any such contract, shall Not enter into any such contract unless proof duly subscribed by an insurance carrier Is produced In a form satisfactory To the chair, that the payment Of disability benefits For all employees has been secured As provided by this article.

EXHIBIT "PBI"

COUNTY OF ERIE

MARK C. POLONCARZ
COUNTY EXECUTIVE

DIVISION OF PURCHASE

ORIGINAL DOCUMENT ON FILE
SEP 28 2017
IN LAW DEPARTMENT

PERFORMANCE BOND

BOND NO. HICNE-10-239-0270

KNOW ALL MEN BY THESE PRESENTS, that we, Visone Construction, Inc. of 79 Sheldon Avenue, Depew, NY 14043 (hereinafter called PRINCIPAL) and the Hudson Insurance Company a corporation of the State of Delaware having its principal office in the City of New York, NY and authorized to do business in the State of New York (hereinafter called SURETY) and held and firmly bound into the County of Erie New York (hereinafter called OBLIGEE), in the amount of Five Hundred Thousand Dollars and 00/100 $500,000.00 Dollars, lawful money of the United States of America, for the payment of which the PRINCIPAL and the SURETY hereby bind themselves, their heirs, executors, administrators, successors and assigns jointly and severally, firmly by these presents.

WHEREAS the above bounden PRINCIPAL has by written agreement dated August 18, ~~19~~ 2017 entered into a contract with the OBLIGEE for $ Two Million One Hundred Nine Thousand Sixty Dollars and 00/100 ($2,109,060.00) which contract and documents included therein by reference is by reference made a part hereof (hereinafter called CONTRACT), covering the following project.

Bid No. 217204-002, Sewer Repair

(Describe Project)

NOW, THEREFORE, the condition of this obligation is such that if the PRINCIPAL shall:

1. well and truly perform and fulfill all the undertakings, covenants, terms, conditions and agreements of said Contract during the original term of said Contract and any extensions thereof that may be granted by the OBLIGEE, with or without notice to the SURETY, and during the life of any guarantee required under the Contract, and shall also well and truly perform and fulfill all the undertakings, covenants, terms, conditions and agreements of any and all modifications of said Contract that may hereafter be made, with or without notice to the SURETY.

2. promptly make payment to all persons having a direct Contract with the PRINCIPAL or with a subcontractor of the PRINCIPAL supplying labor and material in the prosecution of the work provided for in said Contract and any and all modifications of said Contract that may hereinafter be made, notice of which modifications to the SURETY being hereby waived:

then this obligation shall be void, otherwise to remain in full force and effect.

PROVIDED, HOWEVER, and this bond is executed and accepted upon the following express conditions:

1. That all persons who have supplied labor and material as aforesaid shall have a direct right of action hereunder against the PRINCIPAL and the SURETY, subject, however, to the prior right of the OBLIGEE to recover hereunder on account of any loss or damage caused to it by the failure of the PRINCIPAL to perform the Contract as aforesaid.

2. The SURETY for value received hereby stipulates and agrees, if requested to do so by the OBLIGEE, to fully perform and complete the work and furnish the materials mentioned and described in said Contract pursuant to terms, conditions and covenants thereof, if for any cause said PRINCIPAL fails or neglects to so fully perform said work; the said SURETY further agrees to commence said work of completion twenty (20) days after notice thereof from the OBLIGEE.

3. That the OBLIGEE shall notify the SURETY by registered letter addressed and mailed to its Home Office, of any breach of said Contract within sixty (60) days after such breach shall have come to the knowledge of the OBLIGEE. (Owner)

4. That the SURETY shall not be liable hereunder for any damage or compensation recoverable under any Worker's Compensation or Employer's Liability Statute.

5. That no suit, action or proceeding for loss or damage caused by a breach of any of the conditions of this bond shall be brought against the SURETY by the OBLIGEE after one (1) year from the day of final acceptance of the work by the Owner.

6. That no suit, action or proceeding for loss caused by the failure of the PRINCIPAL to pay all persons supplying labor and material in the prosecution of the work under said Contract shall be brought against the SURETY after six (6) months from the day on which final payment of the Contract is made.

Signed, sealed and dated this 28th day of August ~~XX~~ 2017

Visone Construction, Inc.
(PRINCIPAL)

By: _____
President, Vice President, Secretary-Treasurer., David Visone

Hudson Insurance Company (SEAL)
(SURETY)

By: _____
Scott C. Mahorsky, Attorney-in-Fact

EXECUTED POWERS OF ATTORNEY TO BE SUBMITTED WITH PERFORMANCE BOND.

ACKNOWLEDGEMENT, IF A CORPORATION

STATE OF NY

COUNTY OF ERIE

On this 28 day of AUGUST, 2017 before me personally came **David Visone** to me known to be the person duly sworn, did depose and say, that he/she resides in WILLIAMSVILLE NY That he/she is **President** of corporation described in and which executed the foregoing instrument; that he/she knew the seal of said corporation; that the seal affixed to said instrument was such corporate seal; that it was affixed by order of the Board of Directors of said corporation, and that he/she signed his/her name thereto by like order.

RICHARD M. MINKIEWICZ
Notary Public, State of New York
Qualified in Erie County
My Commission Expires 9-21-2021

Sworn before me the date set forth above

Notary Public

SURETY ACKNOWLEDGMENT

STATE OF PENNSYLVANIA)
) SS
COUNTY OF Bucks)

On this 28th day of August, in the year 2017 before me Kimberly G. Rively, a Notary Public in and for said state, personally appeared Scott C. Mahorsky Attorney in Fact for Hudson Insurance Company, known to me to be the person who executed the within bond on behalf of the said corporation, and being fully sworn did duly acknowledge to me that such corporation executed the same for the purposes therein stated.

In Testimony Whereof I have set my hand and affixed my official seal, the day and year stated in the certificate above.

NOTARY PUBLIC Kimberly G. Rively

My Commission Expires: July 13, 2021

COMMONWEALTH OF PENNSYLVANIA
NOTARIAL SEAL
KIMBERLY G. RIVELY, Notary Public
Quakertown Boro., Bucks County
My Commission Expires July 13, 2021

XDP

State of New York

DEPARTMENT OF FINANCIAL SERVICES

WHEREAS IT APPEARS THAT

Hudson Insurance Company

Home Office Address Wilmington, Delaware

Organized under the Laws of Delaware

has complied with the necessary requirements of or pursuant to law, it is hereby

licensed to do within this State the business of

accident and health, fire, miscellaneous property, water damage, burglary and theft, glass, boiler and machinery, elevator, animal, collision, personal injury liability, property damage liability, workers' compensation and employers' liability, fidelity and surety, credit, motor vehicle and aircraft physical damage, marine and inland marine, marine protection and indemnity and legal services insurance, as specified in paragraph(s) 3, 4, 5, 6, 7, 8, 9, 10, 11, 12, 13, 14, 15, 16, 17, 19, 20, 21 and 29 of Section 1113(a) of the New York Insurance Law and also such workers' compensation insurance as may be incident to coverages contemplated under paragraphs 20 and 21 of Section 1113(a), including insurances described in the Longshoremen's and Harbor Workers' Compensation Act (Public Law No. 803, 69 Cong. as amended; 33 USC Section 901 et seq. as amended) to the extent permitted by certified copy of its charter document on file in this Department until July 1, 2016.

In Witness Whereof, I have hereunto set my hand and affixed the official seal of this Department at the City of Albany, New York, this 1st day of July, 2015

Anthony J. Albanese
Acting Superintendent

By Jacqueline Catalfamo

Jacqueline Catalfamo
Special Deputy Superintendent

Original on Watermarked Paper

HICNE-10-239-0270

POWER OF ATTORNEY

KNOW ALL MEN BY THESE PRESENTS: That HUDSON INSURANCE COMPANY, a corporation of the State of Delaware, with offices at 100 William Street, New York, New York, 10038, has made, constituted and appointed, and by these presents, does make, constitute and appoint

Scott C. Mahorsky, Richard V. Dobbs, Jr., Christine A. Hartung
of the State of Pennsylvania

its true and lawful Attorney(s)-in-Fact, at New York, New York, each of them alone to have full power to act without the other or others, to make, execute and deliver on its behalf, as Surety, bonds and undertakings given for any and all purposes, also to execute and deliver on its behalf as aforesaid renewals, extensions, agreements, waivers, consents or stipulations relating to such bonds or undertakings provided, however, that no single bond or undertaking shall obligate said Company for any portion of the penal sum thereof in excess of the sum of **Ten Million Dollars ($10,000,000.00).**

Such bonds and undertakings when duly executed by said Attorney(s)-in-Fact, shall be binding upon said Company as fully and to the same extent as if signed by the President of said Company under its corporate seal attested by its Secretary.

In Witness Whereof, HUDSON INSURANCE COMPANY has caused these presents to be of its Executive Vice President thereunto duly authorized, on this 16th day of August, 20 16 at New York, New York.

(Corporate Seal)

HUDSON INSURANCE COMPANY

Attest: Dina Daskalakis
Corporate Secretary

By: Christopher T. Suarez
Executive Vice President

STATE OF NEW YORK
COUNTY OF NEW YORK. SS.

On the 16th day of August, 20 16 before me personally came Christopher T. Suarez to me known who being by me duly sworn did depose and say that he is an Executive Vice President of **HUDSON INSURANCE COMPANY**, the corporation described herein and which executed the above instrument, that he knows the seal of said Corporation, that the seal affixed to said instrument is such corporate seal, that it was so affixed by order of the Board of Directors of said Corporation, and that he signed his name thereto by like order

(Notarial Seal)

ANN M. MURPHY
Notary Public, State of New York
No. 01MU6067553
Qualified in Nassau County
Commission Expires December 10, 2017

CERTIFICATION

STATE OF NEW YORK
COUNTY OF NEW YORK SS.

The undersigned **Dina Daskalakis** hereby certifies:

That the original resolution, of which the following is a true and correct copy, was duly adopted by unanimous written consent of the Board of Directors of Hudson Insurance Company dated July 27th, 2007, and has not since been revoked, amended or modified:

"RESOLVED, that the President, the Executive Vice Presidents, the Senior Vice Presidents and the Vice Presidents shall have the authority and discretion, to appoint such agent or agents, or attorney or attorneys-in-fact, for the purpose of carrying on this Company's surety business, and to empower such agent or agents, or attorney or attorneys-in-fact, to execute and deliver, under this Company's seal or otherwise, bonds obligations and recognizances, whether made by this Company as surety thereon or otherwise, indemnity contracts, contracts and certificates, and any and all other contracts and undertakings made in the course of this Company's surety business, and renewals, extensions, agreements, waivers, consents or stipulations regarding undertakings so made, and

FURTHER RESOVLED, that the signature of any such Officer of the Company and the Company's seal may be affixed by facsimile to any power of attorney or certification given for the execution of any bond, undertaking, recognizance, contract of indemnity or other written obligation in the nature thereof or related thereto, such signature and seal when so used whether heretofore or hereafter, being hereby adopted by the Company as the original signature of such officer and the original seal of the Company, to be valid and binding upon the Company with the same force and effect as though manually affixed."

THAT the above and foregoing is a full, true and correct copy of Power of Attorney issued by said Company, and of the whole of the original and that the said Power of Attorney is still in full force and effect and has not been revoked, and furthermore that the Resolution of the Board of Directors, set forth in the said Power of Attorney is now in force.

Witness the hand of the undersigned and the seal of said Corporation this 28th day of August, 20 17.

(Corporate Seal)

By: Dina Daskalakis, Corporate Secretary

Form Perf\ 10 8 2010 (v1)

HUDSON INSURANCE COMPANY

SHORT FORM FINANCIAL STATEMENT
AS OF DECEMBER 31, 2016

ASSETS

Bonds	$	322,353,377
Real estate		0
Cash on hand and on deposit		60,570,911
Reinsurance Receivable		192,076,222
FIT recoverable (including net deferred tax asset)		28,783,437
Aggregate write-ins for other than invested assets		233,225,823
Deferred premiums, agents' balances and installments booked but deferred and not yet due (including earned but unbilled premiums)		50,709,775
Stocks		243,888,222
Other Assets		28,297,030
	$	1,159,904,797

LIABILITIES & SURPLUS

Losses	$	154,184,245
Loss adjustment expense		19,135,432
Other expenses		25,051,920
Unearned premiums		45,412,869
Ceded reinsurance premiums payable		373,301,492
Payable to parent, subsidiaries and affiliates		12,584,128
Commissions payable, contingent commissions and other similar charges		14,625,204
Other Liabilities		62,452,222
	$	706,747,514
Preferred and Common capital stock	$	7,500,238
Gross paid in and contributed surplus		293,480,097
Unassigned funds (surplus)		152,176,948
Surplus as regards policyholders	$	453,157,283
	$	1,159,904,797

STATE OF NEW YORK)
) ss:
COUNTY OF NEW YORK)

I, the undersigned Senior Vice President and Controller of Hudson Insurance Company hereby certify the foregoing to be a short form financial statement in the form of a balance sheet, showing the Company's assets and liabilities on a provisional basis, at the close of business on December 31, 2016.

IN TESTIMONY WHEREOF, I have set my hand and affixed the seal of the Company, this 15th day of March, 2017.

Anthony J. Slowski
Anthony Slowski
Senior Vice President and Controller

Subscribed and sworn to before me this 15th day of March 2017
My commission expires

NOTARY PUBLIC
Registration #01LU6334610
Qualified in New York County
My Commission Expires
December 21, 2019

EXHIBIT "M"

CONFINED SPACE PROGRAM CERTIFICATION

This is to certify that Visone Construction Inc has
(Company Name)

established a Confined Space Program which conforms to OSHA 29 CFR Part 1910, as it may be amended. Furthermore, it is understood that full implementation of the contractor's Confined Space Program is a requirement of this contract.

OSHA 10 COMPLIANCE CERTIFICATION

(Chapter 282 of Law of 2007, codified as Labor Law 220-h)

Contractor certifies that every worker employed in the performance of this contract has completed the OSHA 10 Safety Training Course. The Contractor will submit a copy of Proof of Completion of the OSHA 10 Safety Training Course for all workers, Contractors and Subcontractors, with the first certified payroll submitted and on succeeding certified payrolls when any new employee is on the contract. Proof of Completion may include a copy of a bona fide course completion card; a training roster, attendance record, or other documentation from the certified trainer; and/or other valid proof. A certification by the Contractor attesting that all employees have completed such course is not sufficient proof that the course has been completed.

Furthermore, it is understood that completion of the OSHA 10 Safety Training Course by all workers, contractors and subcontractors employed in the performance of this Contract is a requirement of this contract.

By: [signature]
Contractor's Signature

Name: David Visone
Typed or Printed Name

Title: President

Visone Construction Inc
Business Name

Date: 7/27/17

Requirements for OSHA 10 Compliance

Chapter 282 of the Laws of 2007, codified as Labor Law 220-h will take effect on July 18, 2008. The Statute provides as follows:

The advertised specifications for every contract for public work of $250,000.00 or more must contain a provision requiring that every worker employed in the performance of a public work contract shall be certified as having completed an OSHA 10 safety training course. The clear intent of this provision is to require that all employees of public work contractors receive such training "prior to the performing any work on the project."

The Bureau will enforce the statute as follows:

All contractors and sub contractors must attach a copy of proof of completions of the OSHA 10 course to the first certified payroll submitted to the contracting agency and on each succeeding payroll where any new or additional employee is first listed.

Proof of completion may include but is not limited to:

- Copies of bona fide course completion card;
- Training roster, attendance record of other documentation from the certified trainer pending the issuance of the card.
- Other valid proof

** A certification by the employer attesting that all employees have completed such course is not sufficient proof that the course has been completed.

Any questions regarding this statue may be directed to the New York State Department of Labor, Bureau of Public Work at 518-485-5696.

STATE OF NEW YORK
DEPARTMENT OF LABOR
Office of Employability Development/Apprenticeship Training
Governor W. Averell Harriman State Office Building Campus
Building #12, Room 436
Albany, New York 12240

July 9, 2004

Mr. Lucian Visone, Jr., President
Visone Construction, Inc.
79 Sheldon Avenue
Depew, New York 14043

Trade: Skilled Construction Craft Laborer
Effective Date: 07/09/2004
County: Erie
Region: Western – Buffalo

Dear Mr. Visone:

I am pleased to inform you that the apprentice selection and training standards you submitted have been reviewed, approved and registered in accordance with Article 23 of the Labor Law and the Department's Apprentice Training regulations. Copies are enclosed for your information. Also enclosed are copies of Appendix A and B of your contract.

Related instruction is an integral part of apprentice training. You have the responsibility to ensure that your apprentices regularly attend related instruction classes as assigned (Appendix B). This training helps the apprentices to acquire the skill and knowledge necessary to become fully productive and efficient.

Increasing the number of women and minorities in apprenticeships is a continuing goal of the Department. Assuring nondiscrimination in apprenticeships requires a continuing effort on the part of all concerned. Department staff is available upon request to assist in every aspect of your apprenticeship program.

The Prevailing Wage rates for Public Work projects are set by designated government agencies. The wages listed in this program do not supersede or replace those determinations.

You will be required to have your apprenticeship program re-certified every **24** months from the effective date of your program approval. The re-certification will involve a complete review and approval of your apprenticeship program selection and training standards.

Your interest and support for the apprenticeship training program is appreciated.

Sincerely,

Edward F. Drago
Director, Employability Development

EFD: kls

Enclosures
cc: Elizabeth deVasquez – Buffalo
Andrew Adams – DEOD
Neil Rotman – ATCO

Telephone (518) 457-6820 ATCO@labor.state.ny.us Fax (518) 457-7154

EXHIBIT "J"

NEW YORK STATE CERTIFIED APPRENTICESHIP TRAINING PROGRAM CERTIFICATION

Pursuant to Erie County Local Law 2-2006 the following MUST be submitted along with supporting documentation unless the Contracting Agency has otherwise determined under Section 2f of the Erie County Rules and Regulations that the New York State Certified Apprenticeship Training Program does not apply.

TO BE FILLED OUT BY BIDDER: please check that which applies and sign below.

[ ] Enclosed is a copy of the certification of approval of the New York State Certified Apprenticeship Training Program (NYSCATP) by the New York State Department of Labor which, as Bidder, will use in connection with the construction contract. Also enclosed is a written plan demonstrating how apprentices will be utilized by the Bidder as Prime Contractor or by the Subcontractor(s) to the Bidder as Prime Contractor. Such plan shall include at a minimum:

i. An organized written plan in place that embodies the terms and conditions of employment, training and supervision of one or more apprentices;
ii. A schedule of wages to be paid to the apprentices consistent with the skills required and approved by the New York State Department of Labor;
iii. Equal employment and affirmative action plans; and
iv. Demonstration that a minimum of ten percent (10%) of the Workforce of the Prime Contractor (inclusive of the workforce utilized by any Subcontractor(s) to the Bidder) shall consist of persons participating in NYSCATP.

[ ] Enclosed is a detailed explanatory written statement as to the inapplicability of apprenticeship participation due to: The lack of career opportunities in NYSCATP approved by New York State Department of Labor Commissioner; OR The magnitude of the construction contract which would make use of apprentices impracticable.

SIGNATURE	COMPANY NAME	DATE
[signature]	Visone Construction, Inc.	7.27.17

CAUTION: Be advised that Erie County Local Law 2-2006 will be enforced. All bidders must adhere to the provisions detailed on this page of this Proposal. For consideration, bidders must (1) check the appropriate box and (2) enclose the corresponding paperwork.

Erie County Equal Pay Certification

In order to comply with Executive Order 13 dated November 6, 2014, we hereby certify that we are in compliance with federal law, including the Equal Pay Act of 1963, Title VII of the Civil Rights Act of 1964, Federal Executive Order 11246 of September 24, 1965 and New York State Labor Law Section 194 (together " Equal Pay Law"). The average compensation for female employees is not consistently below the average compensation for male employees, taking into account mitigating factors. We understand that this certification is a material component of this contract. Violation of the provisions of Executive Order 13, which is attached hereto and made a part hereof, can constitute grounds for the immediate termination of this contract and may constitute grounds for determining that a bidder is not qualified to participate in future county contracts.

We have evaluated wages and benefits to ensure compliance with the Federal Equal Pay Law.

_____
Signature

Verification

STATE OF NEW YORK)
COUNTY OF ERIE) SS:

A) DAVID VISONE, being duly sworn, states he or she is the owner of (or a partner in) VISONE CONSTRUCTION, and is making the foregoing Certification and that the statements and representations made in the Certification are true to his or her own knowledge.

B) DAVID VISONE, being duly sworn, states that he or she is the Name of Corporate Officer _____, of VISONE CONSTRUCTION, Title of Corporate Officer Name of Corporation the enterprise making the foregoing Certification, that he or she has read the Certification and knows its contents, that the statements and representations made in the Certification are true to his or her own knowledge, and that the Certification is made at the direction of the Board of Directors of the Corporation.

Sworn to before me this 26
Day of JULY, 2017
Christine J. Kempski

CHRISTINE J. KEMPSKI
Notary Public, State of New York
Qualified in Erie County
My Commission Expires 11/20/2018

EXHIBIT "K"

INSTRUCTION TO BIDDERS

I. DEFINITIONS OF TERMS

Whenever the following words and expressions are used in these Specifications, it is understood that they have the meanings given below:

Owner	Party of the first part to the Contract.
Engineer	The term "Engineer" means the consulting firm whose name and address is given on the Invitation to Bid, or any duly authorized representative of that firm.
Bidder	Any individual, firm or corporation submitting a proposal for the work contemplated, acting directly or through a duly authorized representative.
Contractor	Party of the second part to the Contract, acting directly or through his agents or employees. On the various bonds, the Contractor is also called the Principal.
Work	The term "work" is used to designate the work, equipment, materials and things required to be done, furnished or performed by the Contract or under the Specifications attached hereto.
Proposal Or Bid	The required prepared form on which the bidder is to submit or has submitted a proposal for the work contemplated.
Surety	The corporate body which is bound with and for the Contractor and which engages to be responsible for his acceptable performance of the work for which he has contracted.
Performance Bond	The required form of security furnished by the Contractor and his surety as a guarantee of the Completion of the project
Bid Bond	The security to be furnished by the bidder as Guarantee of his ability to procure the minimum equipment and liquid assets specified and that he will enter into a Contract with the "Owner" for the performance of the work, if the work involved in the proposal is awarded to him.
Labor and Materials Payment Bond	The required form of security furnished by the Contractor and his surety as a guarantee of the payment of all employees and material men.
Plans or Drawings	The contract and working drawings as specifically defined in the special conditions of this Contract.
Specifi-cations	The body of directions, requirements, etc., contained in this document, together with all documents of any description, and agreements made (or tube made), pertaining to performing the work, or the quantities and quality (as shown by test records) of accepted materials to be furnished under this

Contract. Specifications shall also include the Invitation to Bid, Proposal, Standard Agreement and bond, and any addenda issued.

Contract	The agreement covering the performance of the work, and the furnishing of materials in the construction of the project. It shall include the Notice to Bidders, Instructions to Bidders, Proposal, Contract, General and Specific Contract Conditions, Contract and Bid Bonds, Plans and Drawings, Insurance, Specifications, Addenda, Appendices (except soil boring logs), Change Orders and any and all other writings necessary to complete the project.
Material	Any material acceptable to the Engineer and conforming to the requirements of the Specifications. All processes and materials shall at all times be open to review and testing by the Engineer and its authorized representatives.
Project	The improvement set forth in the Plans and Specifications and all additions thereto.
Completion	The work "Completion" shall mean full and exact compliance and conformity with the provisions and requirements, expressed or implied, in the Specifications and the Plans, accompanying the forming a part of the same, including all amendments, revisions, corrections or additions, duly authorized.
Informality	Any item in the Proposal which through its omission, error, or otherwise, may cause the Owner to consider the bid informal.
Sub-Contractor	A person, persons or firm working directly for the Contractor.

II. RECEIPT AND OPENING OF BIDS

A. The "Owner", invites bids on the attached application form which must be completely filled in, or it will not be considered. Bids should be forwarded to the Owner at the address designated in the Invitation to Bid. At the time specified in the Invitation to Bid, all bids shall be opened.

B. Proposal shall be enclosed in a sealed opaque envelope plainly marked with the title of the work and name and address of the Bidder on the outside. NO PROPOSAL will be considered unless filed on or before the time and the place designated in the INVITATION TO BID. When sent by mail, preferably registered, the sealed proposal, marked as above, should be enclosed in an additional envelope similarly marked and addressed to the person stipulated in the Invitation to Bid.

C. Proposals received prior to the time of opening will be securely kept unopened. Proposals received thereafter will be returned unopened.

D. Proposals shall be submitted on the PROPOSAL forms ("P" Section) furnished with the Contract Documents.

E. All blank spaces for bid prices shall be properly filled in, in ink, or typed, in both words and figures. IN case any price shown in words and its equivalent shown in figures do not agree, the written word shall be binding on the bidder.

F. If the work consists of more than one contract, Bidders may submit proposals for one or more of the contracts for which they are qualified by law to bid. The Bidder shall prepare a separate proposal for each contract bid which shall be inclusive of all bid forms and security required for a complete bid. The proposal shall be submitted in a separate sealed envelope each clearly marked to distinguish the Contract Bid. It will be assumed that the bidder will accept any single contract for which he has submitted a proposal.

G. In case of the failure of a proposal to conform to the instructions herein contained, the Owner may consider the Proposal of such Bidder informal, and waive the informality, or the Owner may reject said bid.

III. BID SECURITY

Each bid must be accompanied by a certified check payable to the Erie County Comptroller or by a bid bond prepared on the Form of Bid Bond attached hereto duly executive by the Bidder as Principal and having as surety thereon a surety company acceptable to the County Attorney, any of which must be in the amount of $10,000.00 as listed in the Invitation to Bid. Such security will be returned to all except the three (3) lowest formal bidders within ten (10) days after the formal opening of bids, and the remaining checks or bid bonds will be returned to the three (3) lowest bidders within 40 hours after the Owner and the accepted Bidder have executed the Contract, or if no Contract has been executed within 45 days after the date of opening of bids, upon demand of the Bidder at any time thereafter, so long as he has not been notified of the acceptance of his bid. In case this Proposal is accepted by the Owner, and the undersigned shall refuse or neglect, within fifteen (14) calendar days after date of receipt of Notice of Award, to execute and deliver an AGREEMENT in the form provided herein, or to execute and deliver a performance bond and a labor and material bond in the amounts required and in the form prescribed, the amount of bid security shall be forfeited and will be retained by the Owner as liquidated damages, such forfeiture and retention by the Owner shall not prejudice any other right or remedy of the Owner, otherwise the total amount of the bid security will be returned to the depositor in accordance with provisions set forth in the INSTRUCTIONS TO BIDDERS.

IV. ADDENDA AND INTERPREATIONS

No interpretation of the meaning of the Plans, Specifications or other Contract Documents will be made to any Bidder orally. Every request for such interpretation should be made n writing, addressed to Erie County Department of Environment and Planning, Division of Sewerage Management, 95 Franklin Street, Room 1034, Buffalo, New York 14202 given consideration, must be received at least six (6) days prior to the date fixed for the opening of bids. Any and all such interpretations and any supplemental instructions will be in the form of written addenda to the Specifications, which, if issued, will be mailed, to all prospective bidders (at the respective addresses furnished for such purpose), not later than three (3) days prior to the date fixed for the opening of bids. Failure of any bidder to receive such addendum or interpretation shall not relieve any bidder from any obligation under his bid submitted. All addenda so issued shall become part of the Contract Documents.

V. EXAMINIATION OF SITE AND CONTRACT DOCUMENTS

A. Each Bidder shall visit the site of the proposed work and fully acquaint himself with the existing conditions there relating to the work to be performed, and shall inform himself as to the facilities involved, the difficulties and the restrictions attending the performance of the contract. The Bidder shall thoroughly examine and familiarize himself with the Drawings, Specifications, and all other Contract Documents. The Contractor by the execution of the contract shall in no way be relieved of any obligation under it due to his failure to examine the Contract Documents or to visit the site and acquaint himself with the conditions there existing (including both the surface and subsurface conditions), and the Owner will be justified in rejecting any claim based on facts regarding which the Contractor should have been on notice as a result thereof.

B. The Bidder's attention is called to the fact that estimate of quantities of work to be done and materials to be furnished in an itemized contract under the Specifications, as shown on the Proposal form is approximate and is given only as a basis of calculation upon which the award of the Contract is to be made. The Owner does not assume any responsibility for these quantities, nor shall the Contractor plead misunderstanding or deception because of such estimate of quantities, or of the character of the work, location or other condition, including site and underground conditions of soil, rock utilities, etc., pertaining thereto. The Owner, through the Engineer, reserves the right to increase or diminish any or all of the above mentioned quantities of work or to omit any of them as he may deem necessary, and such increase or decrease of the quantities given for any of the items shall not be grounds for granting an increase in the unit prices bid.

C. The following reports which may affect cost, progress, Performance or furnishing of the work have been utilized by ENGINEER in preparation of the Drawings and Specifications. The ENGINEER will make copies of such reports available to any Bidder requesting them. These reports are not intended to constitute any explicit or implicit representation as to the nature of the existing conditions which may be encountered at the project site. Such reports are not guaranteed as to accuracy or completeness and are not part of the Contract Documents. Before submitting Bid, the Bidder will, at its own expense, make such investigations and tests as the Bidder may deem necessary to determine its Bid for performing and furnishing the work in accordance with the Contract Documents.

1)
2)

D. The record drawings on display for this project represent a source of information for the Contractor's viewing. The Contractor(s) are advised that the record drawings may not be necessarily reliable. During the pre-bid period, the contractor(s) are advised to field verify all elevations and dimensions which may be critical to their performance under the terms of the contract. Arrangements to enter the site or facility shall be made through the Owner or Engineer.

VI. MODIFICATION OF PROPOSALS

Any Bidder may modify his bid by written or telegraphic communication at any time prior to the scheduled closing time for receipt of bids, provided such communication is received by the Owner prior to the closing time, and, provided further, in the case of telegraphic communication the Owner is satisfied that a written confirmation of the telegraphic modification over the signature of the Bidder was mailed prior to the closing time. The communication should not reveal the bid price but should provide the addition or subtraction of other modification so that the final prices or terms will not be known by the Owner until the sealed bid is opened. If written confirmation of

telegraphic communications is not received within two days from the closing time, no consideration will be given to the telegraphic modification.

Bidders are cautioned that a modified proposal will be considered informal and that if, in the opinion of the Engineer, such alterations are not explicit, or are in any sense subject to misinterpretations, then the proposal so modified will be subject to rejection.

VII. WITHDRAWAL OF PROPOSALS

Any Bidder upon his properly notarized written request will be given permission to withdraw his Proposal not later than the time set for the opening. At the time of opening of the Proposals, when such Proposal is included, it will be returned to the Bidder unopened. No Bidder may withdraw a bid within 45 days after the opening thereof.

VIII. WITHDRAWAL OF PROPOSALS AFTER OPENING

Negligence on the part of the Bidder in preparing his Proposal confers no right for the withdrawal of the Proposal after it has been opened.

IX. STATEMENT OF BIDDER'S QUALIFICATIONS

Each Bidder shall submit a statement of the Bidder's qualifications, his construction experience, and his organization and equipment available for the work contemplated; and when specifically requested by the Owner, a detailed financial and ownership statement by the apparent low Bidder. The Owner shall have the right to take such steps as it deems necessary to determine the ability of the Bidder to perform his obligations under the Contract, and the Bidder shall furnish the Owner all such information and data for his purpose as it may request. The right is reserved to reject any Proposal where an investigation of the available evidence or information does not satisfy the Owner that the Bidder is qualified to carry out properly the terms of the Contract. The issuing of Bid Documents and acceptance of a Bidder's deposit by the Owner shall not be construed as pre-qualification of that Bidder.

X. POWER OF ATTORNEY

Attorneys-in-fact who sign bid bonds or contract bonds must file with each bond a certified copy of their power of attorney to sign said bonds.

XI. FEDERAL LAWS, STATE LAWS AND REGULATIONS

The Bidder's attention is directed to the fact that all applicable laws, ordinances, rules and regulations of all authorities having jurisdiction over construction work in the locality of the project, shall apply to the Contract throughout, and they are deemed to be included herein the same as though herein written out in full.

XII. SUBCONTRACTOR

A. The lowest responsible Bidder, shall upon request of the Owner, and within three (3) days of such request, submit a list of subcontractors proposed for the performance of the work. At the option of the Bidder, alternate subcontractors may be included in the list, provided that the use of such alternate subcontractors approved by the Owner shall not result in any change in the contract prices stated in the Proposal.

B. If requested by the Engineer, he shall also furnish a statement as to the subcontractor's experience, financial ability, or other qualifications for properly performing the work proposed to be subcontracted. The Owner reserves the right to limit the total amounts of subcontracts to fifty (50) percent of the total Contract price.

C. The lowest responsible Bidder shall furnish a complete list of major equipment and material as separately listed in the Proposal, and such others as required bay the Engineer, and the names and manufacturers or suppliers who will supply such equipment or material to be installed or supplied under this Proposal. Such a list shall be entitled "List of Major Equipment and Material".

XIII. CONSIDERATION OF PROPOSALS

The right to reserve, as the interest of the Owner may require, to reject any or all bids, to waive any informality in bids received in accordance with the provision hereof, to reject any items of any bid to obtain new Proposals, or to proceed to do the work otherwise, when the best interest of the Owner may be promoted thereby.

In the case of a unit priced bid proposal, the Owner reserves the right to complete a thorough review of the Contractor's unit price extensions. The determination of the low bidder will be based on the extension of the unit price bid as applied to the contract quantities.

XIV. ACEPTANCE OF PROPOSAL

The acceptance of a Proposal will be a notice in writing signed by a duly authorized representative of the Owner and no other act of the Owner shall constitute the acceptance of a Proposal. The acceptance of a Proposal shall bind the successful Bidder to execute the Contract as provided hereinafter. The rights and obligations provided for in the contract shall become effective and binding upon the parties only with its formal execution by the successful Bidder and the Owner.

Inasmuch as the provisions of this Contract relating to the time for performance and completion of the work are for the purpose of enabling the Owner to proceed with the construction of a public improvement in accordance with the predetermined program, such provisions are of the essence of the Contract.

XV. AWARD OF CONTRACT

Except where the Owner exercises the right to reject any Proposals, the Owner will award the Contract to the responsible Bidder, submitting the lowest acceptable bid, furnishing adequate security therefore and complying with all requirements of the INVITATION TO BID and these INSTRUCTIONS TO BIDDERS, after investigations are made to determine the Bidder's responsibility and capability, including the acceptability by the Owner of the list of subcontractors proposed for the work by the Bidder.

XVI. MAJOR EQUIPMENT ITEMS

Major equipment shall be of the type supplied by the manufacturer(s) name in each case in appropriate sections of the Specifications. Equal equipment may be supplied, subject to the approval of the Engineer, and in accordance with the General Contract Conditions governing substitutions.

XVII. EXECUTION OF CONTRACT

A. The Bidder whose Proposal has been accepted will be required to appear at the place and at the time designated by the Owner, in person; or if a firm or corporation, a legally authorized representative shall so appear, and shall execute the Contract within fifteen (14) calendar days of date of notice of award of Contract.

B. In addition, the successful Bidder, within the period stipulated in Paragraph A above, shall procure, execute and deliver to the Owner and maintain, at his own cost and expense, the following bonds, in the form attached herein, or such other form approved by the Owner, of a Surety Company approved by the Owner and authorized to do business in the State of the Project as a Surety:

1. Performance Bond – in the total amount $500,000.00 payable to the Contractor by the terms of the Contract.

C. Failure or refusal of the Bidder whose Proposal is accepted to execute the Contract as hereinbefore provided shall constitute a breach by such Bidder of the Agreement created by the acceptance of the Proposal, and in such event, the Owner at his option, may determine that such Bidder has abandoned the Contract. Thereupon such Bidder's Proposal and the acceptance thereof shall be null and void and the Owner shall be entitled to take action for damages. Such damages shall include the amount of the total contract finally accepted in excess of that of the originally successful Bidder, losses arising from delays in the Owner construction program, and all other items of damage to the Owner resulting from such breach. In the recovery of the damages specified above, the Owner may without prejudice to any right of remedy, proceed against the sum represented by the Bid Guaranty deposited with him, and take such other action as the Owner may deem best in the public interest.

D. The Owner shall issue the "Notice to Proceed" after the requirements of paragraphs A and B have been fulfilled, all required insurance and certificates have been furnished to the Owner and approved by the County of Erie Department of law, the Contractor's MBE/WBE program is acceptable to he County of Erie EEO Office, and at a time convenient to the Owner but within fifteen (15) calendar days fro when these items are accepted and approved by the Owner. The Contractor shall commence work within five (5) days after the date of notice to proceed.

XVIII. ASSIGNMENT

The successful Bidder to whom any Contract shall be let, granted or awarded shall not assign, transfer, convey, sublet or otherwise dispose of the Contract or of his right, title or interest therein or his power to execute such Contract, to any person or corporation without the prior consent in writing of the Owner.

XIX. NON-DISCRIMINATION IN EMPLOYMENT

During the performance of this contract the Contractor agrees as follows:

A. The Contractor will not discriminate against any employee or applicant for employment because of race, creed, color, sex, national origin, age, disability, or martial status.

B. If directed to do so by the Commissioner of Human Rights, the Contractor will send to each labor union or representative of workers with which the Contractor has or is bound by a collective bargaining or other agreement or understanding, a notice, to be provided by the State Commissioner of Human Rights, advising such labor union or representative of the Contractor's agreement under clauses (A) through (G) (hereinafter called "non-discrimination clauses"). If the Contractor was directed to do so by the contracting agency as part of the bid or negotiation of this Contract, the Contractor shall request such labor union or representative to furnish a written statement that such labor union or representative will not discriminate because of race, creed, color, sex, national origin, age, disability or marital status, and that such labor union or representative will cooperate, within the limits of its legal and contractual authority, in the implementation of the policy and provisions of these non-discrimination clauses and that it consents and agrees that recruitment, employment and the terms and conditions of employment under this Contract shall be in accordance with the purposes and provisions of these non-discrimination clauses. If such labor union or representative fails or refuses to comply with such a request that it furnish such a statement, the contractor shall promptly notify the State Commissioner of Human Rights of such failure or refusal.

C. If directed to do so by the Commissioner of Human Rights, the Contractor will post and keep posted in conspicuous places, available to employees and applicants for employment, notices to be provided by the State Commissioner of Human rights setting forth the substance of the provisions of clauses (a) and (b) and such provisions of the State's laws against discrimination as the State Commissioner of Human Rights shall determine.

D. The Contractor will state, in all solicitations or advertisements for employees placed by or on behalf of the Contractor, that all qualified applicants will be afforded equal employment opportunity without discrimination because of race, creed, color, sex, national origin, age, disability or martial status.

E. The Contractor will comply with the provisions of Sections 290-299 of the Executive Law and with the Civil Rights Law, will furnish all information and reports determined necessary by the State Commissioner of Human Rights under these non-discrimination clauses and such sections of the Executive Law, and will permit access to the Contractor's books, records and accounts, by he State Commissioner of Human Rights, the Attorney General and the Industrial Commissioner for the purposes of investigation to ascertain compliance with these non-discrimination clauses and such sections of the Executive Law and Civil Rights Law.

F. This Contract may be forthwith cancelled, terminated or suspended, in whole or in part, by the contracting agency upon the basis of a finding made by the State commissioner of Human Rights that the Contractor has not complied with these non-discrimination clauses and the Contractor may be declared ineligible for future Contracts made by or on behalf of the State or a pubic authority or agency of the State, until the Contractor satisfies the State Commissioner of Human Rights that the Contractor has established and is carrying out a program in conformity with the provisions of these non-discrimination clauses. Such findings shall be made by the State Commissioner of Human Rights after conciliation efforts by the Commissioner have failed to achieve compliance with these non-discrimination clauses and after a verified complaint has been filed with the Commissioner, notice thereof has been given to the Contractor and an opportunity has been afforded the Contractor to be heard publicly in accordance with the Executive Law. Such

sanctions may be imposed and remedies invoked independently of or in addition to sanctions and remedies, otherwise provided by law.

G. The Contractor will include the provisions of clauses (A) through (F) in every subcontract or purchase order in such a manner that such provisions will be binding upon each subcontractor or vendor as to operations to be performed within the State of New York. The Contractor will take such action in enforcing such provisions of such subcontract or purchase order as the State Commissioner of Human Rights or the contracting agency may direct, including sanctions or remedies for non-compliance. If the Contractor becomes involved in or is threatened with litigation with a subcontractor vendor as a result of such direction by the State Commissioner of Human Rights or the contracting agency, the Contractor shall promptly so notify the Attorney General, requesting the Attorney General to intervene and protect the interests of the State of New York.

XX. FIXED UNIT PRICES FOR CONTINGENT WORK

Certain items of work under Contract are intended to apply to contingent work where quantities cannot be determined precisely in advance. Unit prices for such work have been determined by the Engineer and are stated under the appropriate items in the Proposal. The Contractor shall perform all work ordered by the Engineer under these items, and only the work so ordered, and the payment for all such work will be made at the fixed unit prices stated herein.

XXI. SAFETY AND HEALTH REGULATIONS

The Contractor shall comply with the Department of Labor Safety and Health Regulations for construction promulgated under the Occupational Safety and Health Act of 1970 (PL 91-596) and under Section 107 of the Contract Work Hours and Safety Standards Act (PL-91-54).

Hazard Communication Programs: All contractors shall be responsible for coordinating any exchange of material safety data sheets or other hazard communication information required to be made available to or exchanged between or among employers at the site in accordance with all laws, ordinances, rules, regulations and orders of any public body. The General Contractor shall provide a centralized location for the maintenance of the material safety data sheets or other hazard communication information required to be made available by any employer on the site. Location of the material safety data sheets or other hazard communication information shall be readily accessible to the employees of any employer on the site.

Hazard Communication Programs: All contractors shall be responsible for coordinating any exchange of material safety data sheets or other hazard communication information required to be made available to or exchanged between or among employers at the site in accordance with all laws, ordinances rules, regulations and orders of any public body. The General Contractor shall provide a centralized location for the maintenance of the material safety data sheets or other hazard communication information required to be made available by any employer on the site. Location of the material safety data sheets or other hazard communication information shall be readily accessible to the employees of any employer on the site. Each other contractor or employer shall furnish to the General Contractor any material safety data sheets or other hazard communication information required to be made available to or exchanged between or among employers at the site in accordance with all laws, ordinances, rules, regulations and orders of any public body.

XXII. NOTIFICATION OF SUBCONTRACTOR

Each prime Contractor and subcontractor shall include by reference the EEO clause and applicable Bid Conditions in all advertisements or other solicitations for bids, and shall include the EEO clause and applicable Bid Conditions in all contracts.

Each prime Contractor and subcontractor must provide written notice to each subcontractor of the specific reporting and record keeping requirements under the EEO clause and applicable Bid Conditions. Upon award of a subcontract, each contractor shall immediately notify the Compliance Agency of the contract number, and subcontractor's name, dollar amount of contract, estimated start and completion dates, and the crafts which will perform work under the subcontract.

XXIII. PRE-WORK CONFERENCE

Prior to commencing work on this project, the Owner shall call a conference to be attended by the Contractor, the Owner, Engineers and representatives. A plan shall be initiated at this conference regarding the prosecution of the work and required action to comply with requirements of agencies having jurisdiction.

XXIV. EXEMPTION FROM SALES AND COMPENSATING USE TAXES

A. Chapters 513 and 514, N.Y.S. Laws of 1975, have amended Tax Law Section 1115(a)(15) and (16).

B. This section relates to exemptions from sales and use taxes for certain property sold to Contractors, subcontractors and repairmen (hereinafter "Contractors") to be used to construct or repair real property for exempt organizations.

C. The net effect of the amendment is that Contractors are still, in general, subject to sales tax when they purchase materials. However, if the raw materials purchased by a Contractor are intended to be used in constructing or repairing real property for an exempt organization and if the tangible personal property will become an integral part of the real property, the Contractor may give his supplier an exempt use certificate and thereby avoid the payment of the tax. Sales tax will continue to be due on all materials purchased by a Contractor which are either "consumables" or rental property used by the Contractor in connection with the construction or repair.

D. The amendment also deletes the requirement that material must be resold to the exempt organization as tangible personal property prior to the time it is incorporated into the structure.

E. In computing their bids, Bidders are not to include the sales and compensating use taxes of the State of New York or of any city and county in the State of New York for any supplies or materials to be sold to the Owner, which is exempt from such taxes.

XXV. INSURANCE REQUIREMENTS

The Bidder's attention is called to additional insurance requirements which may be required by the utility companies, railroads or political subdivisions and agencies when working on private lands and rights-of-way. Where insurance requirements exceed those as provided for in Paragraphs 104, 105 and 106 of the General Contract Conditions, the coverages shall be increased to the amounts stipulated by the named insured. Certificates of insurance shall be completed, executed and approved prior to the signing of the Contract. Each insurance policy shall contain a clause providing that in the event of cancellation, change, or non-renewal of the polices, the insurance

company will give advance written notice to the Owner and the County of Erie, Department of Law.

The Contractor's insurance company must file with the Secretary of State of New York a certificate of authority to conduct business in New York State. This names the Secretary of State as agent to accept service of a summons on behalf of the insurance company.

XXVI. ACCESS TO WORK

The Contract shall provide proper facilities for access and inspection and audit of the work by State and Federal representatives during the preparation or progress of the work.

XXVII.

EQUAL EMPLOYMENT OPPORTUNITY

In the performance of work under Erie County Contracts or any subcontract, no Contractor, subcontractor, nor any person acting on behalf of such Contractor, or subcontractor, in their employment practices, shall by reason of race, color, national origin, sex, age, religion, marital status, or disability discriminate against any citizen of the State of New York who is qualified and available to perform the work to which the employment relates. Reference Title VI of the Civil Rights Act of 1964 (43 USC 200d).

Executive Order 11246, 30 Federal Regulation 12319 (1965) (Equal Opportunity Clause)

During the performance of Erie County contracts, the Contractor agrees:

A. The Contractor will not discriminate against any employee or applicant for employment because of race, color, national origin, sex, age, relation, marital status, or disability. The Contractor will take affirmative action to ensure the applicants are employed and employees are treated during employment, without regard to their race, color, national origin, sex, age, religion, marital status or disability. Such action shall include, but not be limited to the following: employment, upgrading, demotion or transfer; recruitment or recruitment advertising; layoff or termination; rates of pay or other forms of compensation; and selection for training, including apprenticeship.

B. The Contractor agrees to appoint an Equal Employment Opportunity (EEO) officer whose function will be to assure that said Contractor participates fully and effectively in the County or Erie Affirmative Action Program in compliance with the requirements of the County of Erie Contract.

C. The Contractor agrees to post in conspicuous places, available to employees and applicants for employment, notices to be provided by the EEO officer setting forth the provisions of this non-discrimination clause.

D. The Contractor will, in all solicitations or advertisements for employees placed by or on behalf of the Contractor, state that all qualified applicants will receive consideration for employment without regard to race, color, national origin, sex, age, religion, marital status, or disability.

E. The Contractor will send to each labor union or representative of workers with which he has a collective bargaining agreement or other contract or understanding, a notice to be provided by the organization EEO officer, advising the labor union or workers' representative of the Contractor's commitment under Executive Order No. 11246 on September 24, 1965 and shall post copies of the notice in conspicuous places available to employees and applicants for employment.

F. The Contractor will file, by the fifteenth day of each month with the EEO Office and the Contracting Agency, a monthly manpower utilization report of his work force on the Erie County project for the preceding month, broken down by racial groups, craft status, and job

classification and including (a) the number of minority workers he has secured and (b) the type of On-the-Job Training he has provided on the Erie County project, the classification of said minority participants (apprentices, journeymen, and trainees), the specific crafts in which they have received training, and the number of hours they have worked.

G. The Contractor will comply with all provisions of Executive Order No. 11246 of September 24, 1965 and all relevant rules, regulations, and orders of an Erie County Contract and the Erie County Affirmative Action Program.

H. In the event the Contractor's non-compliance with the nondiscrimination clauses of an Erie County Contract or with any such rules, regulations, or orders that contract may be cancelled, terminated, or suspended in whole or in part and the Contractor may be declared ineligible for further Erie County contracts in accordance with the procedures authorized in Executive Order No. 11246 or as otherwise provided by law.

I. The Contractor will include the provisions of paragraphs A through I in every subcontract or purchase order unless specifically exempted by the rules, regulations, or orders, of an Erie County contractual agreement, so that such provisions will be binding upon each subcontractor or vendor.

The Contractor will take such action with respect to any subcontractor or purchase order as the Contracting Agency may direct as a means of enforcing such provisions including sanctions for non-compliance; provided, however, that in the event that Contractor becomes involved in, or is threatened with litigation with any subcontractor or vendor as a result of such direction by the Contracting Agency, the Contractor may request the County of Erie to enter into such litigations to protect the interests of the County of Erie.

MONITORING:

The EEO Office has the responsibility of administering the Monitoring Program for the County of Erie and its Affirmative Action Program. During the monitoring of an organization, the EEO Office shall receive the full cooperation of the Contracting Agency in dealing with organizations needing remedial actions.

The objective of the County of Erie's Monitoring Program is a systematic review, by the EEO Office, of the Contractor's performance in meeting the goals of minority utilization at each level of his work force. There will be two basic results from the County of Erie's monitoring process:

1. Acceptable achievement or progress, according to this program for construction contracts on County of Erie projects, toward the County of Erie's goal of 13.2 minority manpower utilization, and in addition, the County of Erie's goal for the utilization of women in the area of construction shall be in accordance with the U.S. Department of Labor's goals and timetable, with the contract remaining intact.

U.S. Department of Labor – Office of Federal Contract Compliance
GOALS FOR WOMEN IN THE AREA OF CONSTRUCTION:

Goals and Timetables

From April 1, 1978 until March 31, 1979 . . . . . 3.1%

From April 1, 1979 until March 31, 1980 . . . . . 5.1%

From April 1, 1980 . . . . . 6.9%

2. Insufficient progress toward goals according to the program; if an organization is found to be unwilling to correct deficiencies after a recommended non-compliance investigation, the County of Erie may:

A. Summon the Contractor to a hearing.

B. Withhold progress payments in part of in full.

C. Cancel the Contract.

D. Bar the award of future contracts until the Contractor can demonstrate that he will comply.

The County of Erie's Monitoring Program will consist of both Off-Site and On-Site monitoring.

Off-Site monitoring program shall consist of Monthly Employment Utilization reports, standard form 257. Due to the regular turnover of the work force of a construction Contractor and because of Federal Compliance reporting requirements, all Contractors and subcontractors must submit these monthly reports to the Erie County EEO Office and the Contracting Agency. These reports will state an employee's EEO identification trade, classification, hours worked, and the percentage of completion for each County of Erie project for each reporting month.

On-Site monitoring, for the purpose of verifying these monthly reports, will be dependent on but not limited to:

1. The compliance status of each Contractor for each County of Erie construction project.

2. Length of the contract, subcontract, or grant and its percentage of completion.

3. Size of the labor force of the organization.

4. Degree of employment opportunity the County of Erie contract, subcontract, or grant will offer to minority workers.

5. Past record of affirmative action achievement of the organization.

6. Past record of affirmative action compliance performance under the EEO Office.

The EEO Office will have an ongoing Master File, dealing with each Contractor or subcontractor for each County of Erie construction project participated in for reference of the past performance of each Contractor.

In the event any deficiencies are found during an Off-Site or On-Site analysis, organization officials shall receive a summary of these deficiencies and the audits made for each reporting month. Any violations found will be fully explained and discussed with the Contractor or subcontractor. During discussions with the EEO Office and the Contracting Agency, alternative solutions to particular problems will be explored. At this time, attempts will be made to obtain the Contractor's agreements to take action by specified dates and a duplicate copy of the agreement will be sent to the Contractor or subcontractor.

RULES AND REGULATIONS ADOPTED BY THE

ERIE COUNTY COMMISSIONER OF PUBLIC WORKS REGARDING:

COUNTY OF ERIE
LOCAL LAW NO. 2-2006

A LOCAL LAW in relation to a requirement for New York State Certified Worker Training
Programs by contractors and subcontractors under construction contracts, as defined herein, with the County of Erie.

Pursuant to Section 5 of Erie County Local Law No. 2-2006, "the Commissioner of the Erie County Department of Public Works shall promulgate such rules and regulations that are lawful, necessary and appropriate to implement, enforce or otherwise carry out the purposes of this Local Law..." Such rules and regulations are as follows:

1. Definitions.

"Bidders" – an individual or entity which submits a formal Bid for a Construction Contract, as hereinafter defined.

"Bids" – formal bids submitted for a Construction Contract, as hereinafter defined, in accordance with New York General Municipal Law.

"Commissioner" – Erie County Commissioner of Public Works

"Construction Contract" – a contract for a Project which includes more than an incidental amount of construction-type activity performed by persons in trades or careers for which there exists an NYSCATP, as hereinafter defined.

"Contracting Agency" – a department, division, board, agency or office of the County, an entity undertaking a Project that Erie County funds indirectly, or an entity undertaking a Project with the specific intent of leasing the completed Project to the County, which solicits and receives Bids for a Construction Contract.

"Local Law" – Erie County Local Law 2-2006

"Monitoring Agency" – the Erie County Equal Employment Opportunity Office

"New York State Certified Apprentice Training Program" or "NYSCATP" - a state registered and regulated apprenticeship program(s) approved by the Commissioner of the New York State Department of Labor in accordance with Article 23 of the Labor Law and the Rules and Regulations thereto.

"Prime Contractor" – the party with whom the Contracting Agency contracts with on a Project.

"Project" – the construction, reconstruction, improvement, rehabilitation, installation, alteration, renovation, demolition or otherwise of any building, facility, roads, highways, bridges, or physical structure of any kind, estimated by the Contracting Agency as having a cost to complete in excess of $250,000, for which the County is a direct or indirect party to a Construction Contract. Projects include those: that Erie County funds directly, either in whole or in part; that Erie County funds indirectly, either in whole or in part, by providing funds to a separate entity to perform the construction-type activity; privately financed construction projects specifically built with the intent of leasing the completed project to Erie County; and construction projects built under Erie County's direction and later paid for with Erie County funds.

"Rules" – these rules and regulations promulgated by the Commissioner pursuant to the Local Law.

"Subcontractor" – A subcontractor to a Prime Contractor.

"Workforce" – the total worker hours anticipated on the Construction Contract to be undertaken by workers in careers or trades for which there exists an NYSCATP.

2. Rules and Regulations.

a. Each Contracting Agency shall include in its bid specifications provisions for the implementation of the Local Law and these Rules. Bids shall demonstrate a Bidder's ability to comply with the Local Law and these Rules and in the event that Bidder is a successful Prime Contractor on a Construction Contract.

b. Bidder shall submit as part of the Bid a copy of the certification of approval of the NYSCATP by the New York State Department of Labor which will be used by the Bidder in connection with the Construction Contract. Such NYSCATP shall be a NYSCATP registered by the NYS Commissioner of Labor which will be utilized by the Bidder on the Construction Contract by the Bidder as a Prime Contractor or by the Bidder's Subcontractor(s).

c. As part of its' Bid, Bidder shall provide a written plan demonstrating how apprentices will be utilized by the Bidder as Prime Contractor or by Subcontractor(s) to the Bidder as Prime Contractor. Such plan shall include at a minimum, but not be limited to the following:

i. An organized, written plan in place that embodies the terms and conditions of employment, training and supervision of one or more apprentices;
ii. A schedule of wages to be paid to the apprentices consistent with the skills required and approved by the New York State Department of Labor;
iii. Equal employment opportunity and affirmative action plans.
iv. demonstration that ten percent (10%) of the Workforce of the Prime Contractor (inclusive of the workforce utilized by any Subcontractor(s) to the Bidder) shall consist of persons participating in New York State Certified Apprentice Training Programs.

d. In the alternative, Bidder may provide a statement as to the inapplicability of apprenticeship participation on the Prime Contract and the related subcontracts due to the inability of the Bidder to obtain approval of an apprenticeship training program resulting from the New York State Department of Labor's suspension of the development and approval of NYSCATP's in all trades and the addition of new participating employers to existing NYSCATPs; lack of career opportunities in NYSCATP approved by New York State Department of Labor Commissioner or that the magnitude of the Construction Contract would make use of apprentices impracticable. In the event that Bidder provides a statement that there is a lack of such career opportunities or the use of apprentices on the Construction Contract is impracticable, said Bidder may not be deemed non-responsive by virtue of the submission of such a statement, as determined by the Monitoring Agency. Applicability of this section will be viewed within the total Workforce of each Prime Contract and not as a function of each subcontract of the Construction Contract as a whole.

e. As part of its' Bid, Bidder shall provide affirmation of its commitment toward acceptable achievement or progress towards the County of Erie workforce development and diversification goal in all construction contracts of thirty percent (30%) minority and female participation combined in project personnel including trades people, trainees, journeymen, apprentices and supervisory staff.

f. Contracting Agency may determine prior to the advertisement of bids for the Project or prior to the award of Bids that the nature of the Construction Contract does not provide an adequate opportunity for the use of NYSCATP for such reasons including, but not limited to, that:

i. 75% or more of the value of the Construction Contract involves material, equipment and/or supplies; or

ii. there is a lack of NYSCATP approved by the Department of Labor for at least 5% of the work hours anticipated to be spent on construction-type activity involved in the Construction Contract; or

iii. the Construction Contract is in response to an emergency condition; or

iv. the Project is estimated to cost less than $250,000; or

v. none of the bids received were from Bidders who had an NYSTACP.

g. All Bids shall be reviewed by the Monitoring Agency within 10 business days of delivery of the Bids by the Contracting Agency to the Monitoring Agency. A Contracting Agency shall not reject any Bid as being non-responsive to the requirements of the Local Law and these Rules, unless the Monitoring Agency, within 10 business days of receipt of Bids from the Contracting Agency, provides the Contracting Agency with a written report recommending non-responsiveness of the Bidder and the reasons therefore. Determination of a Bidder's compliance with the Local Law and these Rules shall be the responsibility of the Monitoring Agency.

h. The Contracting Agency is permitted to require within the Bid specifications for a Project, a reasonable fee for the Prime Contractor to hire an independent monitor to review and report on the diversification goals of the Local Law.

MONTHLY REPORT

_____ of

SRF PROJECT NO.

CONTRACTOR'S MINORITY AND WOMEN'S BUSINESS (M/WBE) MONTHLY REPORT

The following information indicates the payment amounts made to the contractor by the _____ of _____ and payments made to NYS certified M/WBE's from the contractor on this project. The payments as shown made to them are in compliance with contract documents for the above referenced project:

MONTH _____ YEAR _____

CONTRACTOR _____ CONTRACT NO. _____

CONTRACT AMOUNT $_____ AMOUNT PAID TO CONTRACTOR THIS MONTH _____

MBE Goal/Amount ____% = $ _____ WBE Goal/Amount _____% = $

Subcontractor	Work Status This Report	Total Sub. Cont. Amt. $		Payments This Month		Previous Payments		Total Payments & Made to Date	
		MBE	WBE	MBE	WBE	MBE	WBE	MBE	WBE
	___ Active ___ Inactive ___ Complete								
	___ Active ___ Inactive ___ Complete								
	___ Active ___ Inactive ___ Complete								
	___ Active ___ Inactive ___ Complete								
	___ Active ___ Inactive ___ Complete								
	___ Active ___ Inactive ___ Complete								
TOTAL									

Monthly Employment Utilization Report

U.S. Department of Labor

Employment Standards Administration
Office of Federal Contract Compliance Programs

This report is required by Executive Order 11246, Sec. 203. Failure to report can result in contracts being cancelled, terminated or suspended in whole or in part and the contractor may be declared ineligible for further Government contracts of federally assisted construction contracts.

1. Covered Area (SMSA or EA)

2. Employers I.D. No.

OMB No. 1215-01633
Expires: 12/13/92

3. Current Goals
Minority
Female 6.9%

4. Reporting Period
From
To

Name and Location of Contractor

Federal Funding Agency

5. CONSTRUCTION TRADE	Classifications	6. TOTAL FEDERAL & NON-FEDERAL CONSTRUCTION WORK HOURS												9. Total Number of Employees		10. Total Number of Minority Employees	
		6a. Total All Employees By Trade		6b. Black (Not of Hispanic Origin)		6c. Hispanic		6d. Asian or Pacific Islander		6e. American Indian or Native American		7. Minority Percentage	8. Female Percentage				
		M	F	M	F	M	F	M	F	M	F			M	F	M	F
	Journey Worker																
	Apprentice																
	Trainee																
	Sub-Total																
	Journey Worker																
	Apprentice																
	Trainee																
	Sub-Total																
	Journey Worker																
	Apprentice																
	Trainee																
	Sub-Total																
	Journey Worker																
	Apprentice																
	Trainee																
	Sub-Total																
	Journey Worker																
	Apprentice																
	Trainee																
	Sub-Total																
Total Journey Worker																	
Total Apprentices																	
Total Trainees																	
Grand Total																	

11. Company Official's Signature and Title

12. Telephone Number (Include area code)
(

13. Date Signed

Page
of

Form CC-257
Rev. Jan. 1992

EXHIBIT "PR"

PROPOSAL

TO: ERIE COUNTY DEPARTMENT OF ENVIRONMENT AND PLANNING, ERIE COUNTY, NEW YORK (hereinafter called the Owner)

FOR: Erie County Sewer District Nos. 1, 2, 3, 4, 5, 6, 8
Contract No. 79
Sewer Repair Term Contract

1. Pursuant to, and in accordance with the Invitation to Bid and the Instructions to Bidders relating thereto, the undersigned hereby offers to:

Furnish all materials, supplies, tools and labor required for the project, for the following unit and lump sum prices, which shall constitute the total bid for the project.
In submitting this bid, the undersigned bidder understands and agrees that the bidder must furnish and provide for the respective item price bid all the necessary materials, labor, supplies, equipment, tools, transportation and all other items of whatever nature and to perform all the work necessary in accordance with the plans and specifications for said improvements. Further, that this bid is submitted with the following understanding:

That the undersigned bidder has carefully examined the plans, specifications, addenda and the form of contract and all other contract documents and has personally inspected the actual location of the work site and has determined that this bid is adequate to fully complete all scheduled improvements;

That all scheduled improvements will be completed in conformance with the plans, specifications and all other contract documents and addenda issued;

That the undersigned bidder understands the specifications and he assumes full responsibility for the ways, means and methods to accomplish the intent and performance requirements of the plans and specifications;

That the bid is based on unit and lump sum prices and where unit prices are bid, the undersigned bidder agrees to accept such unit bid prices as compensation for any additions or deductions caused by variations in unit quantities due to more accurate measurement or changes or alternations in the Work made pursuant to the contract documents;

The undersigned Bidder agrees to submit to all conditions reported, intended, or implied, both particularly and generally by the Contract at the prices herein stated for:

Erie County DSM Sewer Repair Term Contract ECSD No. 1,2,3,4,5,6,8 Contract No. 79

(Bidder to fill in Contract Number and Title)

2. The undersigned Bidder also agrees as follows:

FIRST: If the Proposal is accepted to execute the Contract within fifteen (15) calendar days of date of Notice of Award of Contract, and furnish to the Owner satisfactory surety bonds each in the sum of $500,000.00 as security for the faithful performance of the work, and for the payment of all persons performing labor and furnishing materials in connection with the work.

SECOND: To begin and complete Work Orders within the time requirements stipulated in Section 01010 of the Specifications.

THIRD: In the event that the Contractor shall fail to complete the work within the time stated in this Contract, as the same may be modified by extensions of time granted by the Owner, the Contractor and his sureties shall at the owner's option, be liable for, and pay to the Owner, additional engineering fees and actual damages or the sum specified in the Contract as fixed, agreed liquidated damages for each calendar day for such delay until the work is completed and accepted, PROVIDED that the Owner may extend the Contract time by written order due to unforeseen conditions which may arise.

FOURTH: In submitting this Bid, the Contractor represents, as more fully set forth in the Agreement, that he has examined the Instruction to Bidders, all of the other bidding Documents and all of the Contract Documents; that he has examined the actual site and locality where the Work is to be performed; that he has familiarized himself with the legal requirements (federal, state and local laws, rules and regulations); that he has made such independent investigations as he deems necessary; and that he has satisfied himself as to all conditions affecting cost, progress or performance of the work, and penalties for failure to achieve substantial completion by the dates stipulated in the Contract; and that by signing this bid waives all rights to plead any misunderstanding regarding the same.

FIFTH: The Contractor agrees to comply with the requirements of the State commission for Human Rights during the performance of this Proposal and further that:

(a) The Contractor will not discriminate against any employee or applicant for employment because of race, creed, color or national origin, and will take affirmative action to insure that they are afforded equal employment opportunities without discrimination because of race, creed, color or national origin. Such action shall be taken with reference, but not be limited to: recruitment, employment, job assignment, promotion, upgrading, demotion, transfer, layoff

or termination, rates of pay or other forms of compensation and selection for training or retraining, including apprenticeship and on-the-job training.

(b) The Contractor will send to each labor union or representative of workers with which he has or is bound by a collective bargaining or other agreement or understanding, a notice, to be provided by the State Commission for Human Rights, advising such labor union or representative of the Contractor's agreement under clauses (a) through (g) (hereinafter called "non-discrimination clauses"). If the Contractor was directed to do so by the contracting agency as part of the bid or negotiation of this Contract, the Contractor shall request such labor union or representative to furnish him with a written statement that such labor union or representative will not discriminate because of race, creed, color or national origin and that such labor union or representative either will affirmatively cooperate, within the limits of its legal and contractual authority, in the implementation of the policy and provisions of these non-discrimination clauses or that it consents and agrees that recruitment, employment and the terms and conditions of employment under this Contract shall be in accordance with the purposes and provisions of these non-discrimination clauses. If such labor union or representative fails or refuses to comply with such a request that it furnish such a statement, the Contractor shall promptly notify the State Commission for Human Rights of such failure or refusal.

(c) The Contractor will post and keep posted in conspicuous places, available to employees and applicants for employment, notices to be provided by the State Commission for Human Rights setting forth the substance of the provisions of clauses (a) and (b) and such provisions of the State's laws against discrimination as the State Commission for Human Rights shall determine.

(d) The Contractor will state, in all solicitations or advertisements for employees placed by or on behalf of the Contractor, that all qualified applicants will be afforded equal employment opportunities without discrimination because of race, creed, color or national origin.

(e) The Contractor will comply with the provisions of Sections 291-299 of the Executive Law and the Civil Rights Law, will furnish all information and reports deemed necessary by the Station Commission for Human Rights under these non-discrimination clauses and such sections of the Executive Law, and will permit access to his books, records and accounts by the State Commission for Human Rights, the Attorney General and the Industrial Commissioner for purposes of investigation to ascertain compliance with these non-discrimination clauses and such sections of the Executive Law and Civil Rights Law.

(f) The Contract for the Proposed work may be forthwith canceled, terminated or suspended, in whole or in part, by the contracting agency upon the basis of a finding made by the State Commission for Human Rights that the Contractor has not complied with these non-discrimination clauses, and the Contractor may be declared ineligible for future contracts made by or on behalf of the State or a public authority or agency of the State, until he satisfies the State Commission for Human Rights that he has established and is carrying out a program in conformity with the provisions of these non-discrimination clauses. Such finding shall be made by the State Commission for Human Rights after conciliation efforts by the Commission have failed to achieve compliance with these non-discrimination clauses and after a verified complaint

has been filed with the Commission, notice thereof has been given to the Contractor and opportunity has been afforded to him to be heard publicly before three members of the Commission. Such sanctions may be imposed and remedies invoked independently of or in addition to sanctions and remedies otherwise provided by law.

(g) The Contractor will include the provisions of clauses (a) through (f) in every subcontract or purchase order in such a manner that such provisions will be binding upon each subcontractor or vendor as to operations to be performed within the State of New York. The Contractor will take such action enforcing such provisions of such subcontract or purchase order as the contracting agency may direct, including sanctions or remedies for non-compliance. If the Contractor becomes involved in or is threatened with litigation with a subcontractor or vendor as a result of such direction by the Contracting agency, the Contractor shall promptly so notify the Attorney General, requesting him to intervene and protect the interests of the State of New York.

SIXTH: The Contractor agrees:

(a) That in the hiring of employees for the performance of work under this Contract or any subcontract hereunder, no Contractor, subcontractor, nor any person acting on behalf of such Contractor or subcontractor, shall by reason of race, creed, color or national origin discriminate against any citizen of the State of New York who is qualified and available to perform the work to which the employment relates;

(b) That no Contractor, subcontractor, nor any person on his behalf, shall, in any manner, discriminate against or intimidate any employee hired for the performance of work under this Contract on account of race, creed, color or national origin;

(c) That there may be deducted from the amount payable to the Contractor by the state or municipality under this Contract a penalty of five dollars for each person for each calendar day during which such person was discriminated against or intimidated in violation of the provisions of the Contract;

(d) That this Contract may be cancelled or terminated by the state or municipality, and all monies due or to become due to become due hereunder may be forfeited, for a second or any subsequent violation of the terms or conditions of this section of the Contract.

3. The undersigned submits herewith bid security in the amount of five (5%) percent of the bid as specified in Instructions to Bidders, Section III, and agrees to submit such additional information as required in Instructions to Bidders, Section IX. In case this Proposal is accepted by the Owner, and the undersigned shall refuse or neglect, within fifteen (15) calendar days after date of receipt of Notice of Award, to execute and deliver an AGREEMENT in the form provided herein, or to execute and deliver a performance bond and a labor and material bond in the amounts required and in the form prescribed, the amount of bid security shall be forfeited and will be retained by the Owner as liquidated damages, such forfeiture and retention by the Owner shall not prejudice any other right or remedy of the Owner, otherwise the total amount of the bid security will be returned to the depositor in accordance with provisions set forth in the INSTRUCTIONS TO BIDDERS.

4. The undersigned agrees that he is bound by the Addenda regardless of any inconsistencies with the plans, specifications or other instructions herein.

The undersigned Bidder hereby acknowledges that he has received and considered the following Addenda to the Contract Documents:

Addendum No.	Date of Issue
1	7.13.17

5. The undersigned hereby designates as his office to which such notice of acceptance may be mailed, or delivered:

Visone Construction, Inc.
79 Sheldon Ave
Depew NY 14043

The undersigned further agrees to comply with all requirements as set forth in the Form of Contract, as well as the general contract conditions.

6. The Bidder furnishes the following information pertaining to previous Government Contracts:

The Bidder has (X) has not ( ) participated in a previous Contract subject to the non-discrimination clause prescribe by Executive Order 11375 dated October 13, 1967. The Bidder has (X) has not ( ) submitted compliance reports in connection with any such Contract as required by applicable instructions.

If the Bidder has participated in a previous Contract subject to the non-discrimination clause and has not submitted compliance report as required by applicable instructions, the Bidder shall submit a statement indicating compliance.

7. The undersigned agrees to comply with all requirements/provisions of Local Law No. 2-2006 and the Rules and Regulations as promulgated by the Commissioner of Public Works, as set forth in these Specifications.

8. By executing this Proposal, the undersigned agrees to comply with all clauses required by this Proposal and contained herein.

By: _____ Visone Construction, Inc.
Contractor's Signature — Business Name

Name: Dave Visone — Date: 7-27-17
Typed or Printed Name

Title: President

CONTRACT NO. 79

Note: Payment Items are divided into three (3) parts: 1) Contractor Bid Prices, 2) Minimum Bid Prices, and 3) Fixed Bid Prices. Parts 1, 2, and 3 shall be added together to determine the total amount base bid on Page P-7-45 of the Proposal.

PART 1 – CONTRACTOR BID PRICES

Bid Item No. 1 – Gravity Sewer Open Cut Repair

For furnishing all supervision, labor, materials, tools, equipment, supervision and incidentals required to install gravity sewer pipe open cut spot repairs including all work as described in Section 01020, and in detailed in Section 02200, and Section 02375, the following unit prices per linear foot of:

Item No.	Quantity with Units	Item Description with Unit Price (in Words)	Unit Price (in Figures)	Total
1A	400 LF	8-12" Dia. Sewer Pipe Install ≥ 10 LF & < 100 LF (<8' depth) ~~One Hundred Eighty~~ Two Hundred (Written) Six Dollars And zero Cents Per LF	$ 206.00 Per LF	$ 82,400.00
1B	600 LF	8-12" Dia. Sewer Pipe Install ≥ 10 LF & < 100 LF (8.01'-12' depth) ~~One Hundred Ninety~~ one (Written) Hundred Ninety Dollars And zero Cents Per LF	$ 190.00 Per LF	$ 114,000.00

Item No.	Quantity with Units	Item Description with Unit Price (in Words)	Unit Price (in Figures)	Total
1C	50 LF	8-12" Dia. Sewer Pipe Install ≥ 10 LF & < 100 LF (12.01' – 16' depth) (Written) Four Hundred Fifty Dollars And zero Cents Per LF	$ 450.00 Per LF	$ 22,500.00
1D	50 LF	8-12" Dia. Sewer Pipe Install ≥ 10 LF & < 100 LF (16.01'-20' depth) (Written) Five Hundred Fifty Dollars And zero Cents Per LF	$ 550.00 Per LF	$ 27,500.00
1E	50 LF	>12-24" Dia. Sewer Pipe Install ≥ 10 LF & < 100 LF (<8' depth) (Written) Two Hundred Dollars And zero Cents Per LF	$ 200.00 Per LF	$ 10,000.00
1F	75 LF	>12-24" Dia. Sewer Pipe Install ≥ 10 LF & < 100 LF (8.01'-12' depth) (Written) Two Hundred Twent Five Dollars And zero Cents Per LF	$ 225.00 Per LF	$ 16,875.00

Item No.	Quantity with Units	Item Description with Unit Price (in Words)	Unit Price (in Figures)	Total
1G	50 LF	>12-24" Dia. Sewer Pipe Install ≥ 10 LF & < 100 LF (12.01'-16' depth) (Written) Three Hundred Fifty Dollars And zero Cents Per LF	$ 350.00 Per LF	$ 17,500.00
1H	10 LF	>12-24" Dia. Sewer Pipe Install ≥ 10 LF & < 100 LF (16.01'-20' depth) (Written) Fifteen Hundred Dollars And zero Cents Per LF	$ 1,500.00 Per LF	$ 15,000.00
1I	10 LF	>24-42" Dia. Sewer Pipe Install ≥ 10 LF & < 100 LF (<8' depth) (Written) Nine Hundred Twenty Four Dollars And zero Cents Per LF	$ 924.00 Per LF	$ 9,240.00
1J	20 LF	>24-42" Dia. Sewer Pipe Install ≥ 10 LF & < 100 LF (8.01'-12' depth) (Written) Nine Hundred Twenty Five Dollars And zero Cents Per LF	$ 925.00 Per LF	$ 18,500.00

Item No.	Quantity with Units	Item Description with Unit Price (in Words)	Unit Price (in Figures)	Total
1K	10 LF	>24-42" Dia. Sewer Pipe Install ≥ 10 LF & < 100 LF (12.01'-16' depth) (Written) Fifteen Hundred Dollars And zero Cents Per LF	$1,500.00 Per LF	$15,000.00
1L	10 LF	>24-42" Dia. Sewer Pipe Install ≥ 10 LF & < 100 LF (16.01'-20' depth) (Written) Two Thousand Dollars And zero Cents Per LF	$2,000.00 Per LF	$20,000.00
1M	600 LF	8-12" Dia. Sewer Pipe Install ≥ 100 LF (<8' depth) (Written) One Hundred Twenty Five Dollars And zero Cents Per LF	$125.00 Per LF	$75,000.00
1N	900 LF	8-12" Dia. Sewer Pipe Install ≥ 100 LF (8.01'-12' depth) (Written) One Hundred Seventy Five Dollars And zero Cents Per LF	$175.00 Per LF	$157,500.00

Item No.	Quantity with Units	Item Description with Unit Price (in Words)	Unit Price (in Figures)	Total
1O	100 LF	8-12" Dia. Sewer Pipe Install ≥ 100 LF (12.01'-16' depth) Three Hundred (Written) Dollars And zero Cents Per LF	$ 300.00 Per LF	$ 30,000.00
1P	100 LF	8-12" Dia. Sewer Pipe Install ≥ 100 LF (16.01'-20' depth) Three Hundred Fifty Five (Written) Dollars And zero Cents Per LF	$ 355.00 Per LF	$ 35,500.00
1Q	300 LF	>12-24" Dia. Sewer Pipe Install ≥ 100 LF (<8' depth) Two Hundred Forty (Written) Dollars And zero Cents Per LF	$ 240.00 Per LF	$ 72,000.00
1R	600 LF	>12-24" Dia. Sewer Pipe Install ≥ 100 LF (8.01'-12' depth) Two Hundred (Written) Dollars And zero Cents Per LF	$ 200.00 Per LF	$ 120,000.00

Item No.	Quantity with Units	Item Description with Unit Price (in Words)	Unit Price (in Figures)	Total
1S	100 LF	>12-24" Dia. Sewer Pipe Install ≥ 100 LF (12.01'-16' depth) Three Hundred Twenty Five (Written) Dollars And Zero Cents Per LF	$ 325.00 Per LF	$ 32,500.00
1T	100 LF	>12-24" Dia. Sewer Pipe Install ≥ 100 LF (16.01'-20' depth) Four Hundred Fifty (Written) Dollars And Zero Cents Per LF	$ 450.00 Per LF	$ 45,000.00
1U	100 LF	>24-42" Dia. Sewer Pipe Install ≥ 100 LF (<8' depth) Four Hundred Twenty Five (Written) Dollars And Zero Cents Per LF	$ 425.00 Per LF	$ 42,500.00
1V	100 LF	>24-42" Dia. Sewer Pipe Install ≥ 100 LF (8.01'-12' depth) Four Hundred Ninety (Written) Dollars And Zero Cents Per LF	$ 490.00 Per LF	$ 49,000.00

Bid Item No. 2 – Forcemain Sewer Open Cut Repair

For furnishing all supervision, labor, materials, tools, equipment, supervision and incidentals required to install forcemain sewer pipe open cut spot repairs including all work as described in Section 01020, and in detailed in Section 02200, and Section 02375, the following unit prices per linear foot of:

Item No.	Quantity with Units	Item Description with Unit Price (in Words)	Unit Price (in Figures)	Total
2A	50 LF	6-8" Dia. Forcemain Install ≥ 10 LF & < 100 LF (Written) One Hundred Forty Five Dollars And zero Cents Per LF	$ 145.00 Per LF	$ 7,250.00
2B	50 LF	>8-10" Dia. Forcemain Install ≥ 10 LF & < 100 LF (Written) One Hundred Fifty Dollars And zero Cents Per LF	$ 150.00 Per LF	$ 7,500.00
2C	50 LF	>10-12" Dia. Forcemain Install ≥ 10 LF & < 100 LF (Written) One Hundred Fifty Five Dollars And zero Cents Per LF	$ 155.00 Per LF	$ 7,750.00

Item No.	Quantity with Units	Item Description with Unit Price (in Words)	Unit Price (in Figures)	Total
2D	50 LF	>12-14" Dia. Forcemain Install ≥ 10 LF & < 100 LF One Hundred Fifty Eight (Written) Dollars And zero Cents Per LF	$ 158.00 Per LF	$ 7,900.00
2E	50 LF	>14-16" Dia. Forcemain Install ≥ 10 LF & < 100 LF one Hundred Sixty Seven (Written) Dollars And zero Cents Per LF	$ 167.00 Per LF	$ 8,350.00
2F	50 LF	>16-18" Dia. Forcemain Install ≥ 10 LF & < 100 LF One Hundred Eighty Three (Written) Dollars And zero Cents Per LF	$ 183.00 Per LF	$ 9,150.00
2G	100 LF	6-8" Dia. Forcemain Install > 100 LF One Hundred five (Written) Dollars And zero Cents Per LF	$ 105.00 Per LF	$ 10,500.00

Item No.	Quantity with Units	Item Description with Unit Price (in Words)	Unit Price (in Figures)	Total
2H	100 LF	>8-10" Dia. Forcemain Install > 100 LF (Written) one Hundred Ten Dollars And zero Cents Per LF	$ 110.00 Per LF	$ 11,000.00
2I	100 LF	>10-12" Dia. Forcemain Install > 100 LF (Written) one Hundred Fifteen Dollars And zero Cents Per LF	$ 115.00 Per LF	$ 11,500.00
2J	100 LF	>12-14" Dia. Forcemain Install > 100 LF (Written) one Hundred Twenty Dollars And zero Cents Per LF	$ 120.00 Per LF	$ 12,000.00
2K	100 LF	>14-16" Dia. Forcemain Install > 100 LF (Written) one Hundred Thirty Dollars And zero Cents Per LF	$ 130.00 Per LF	$ 13,000.00

Item No.	Quantity with Units	Item Description with Unit Price (in Words)	Unit Price (in Figures)	Total
2L	100 LF	>16-18" Dia. Forcemain Install > 100 LF (Written) one Hundred Forty Five Dollars And zero Cents Per LF	$ 145.00 Per LF	$ 14,500.00

*Total for Bid Item No. 2 (Written) One Hundred Twenty Thousand Four Hundred Dollars and zero Cents $ 120,400.00

Bid Item No. 3 – Sewer Lateral Pipe Replacement

For furnishing all supervision, labor, materials, tools, equipment, supervision and incidentals required to install sewer lateral pipe replacement including all work as described in Section 01020, and in detailed in Section 02200, and Section 02375, the following unit prices of:

Item No.	Quantity with Units	Item Description with Unit Price (in Words)	Unit Price (in Figures)	Total
3A	50 LF	4" Diameter Sewer Lateral Pipe Replacement (Written) One Hundred Seventy Five Dollars And zero Cents Per LF	$ 175.00 Per LF	$ 8,750.00
3B	50 LF	6" Diameter Sewer Lateral Pipe Replacement (Written) One Hundred Seventy Five Dollars And zero Cents Per LF	$ 175.00 Per LF	$ 8,750.00
3C	10 EA	6" Sewer Cleanout (Any Depth) (Written) One Thousand Two Hundred Twenty Five Dollars And zero Cents Per Each	$1,225.00 Per Each	$ 12,250.00

*Total for Bid Item No.3 (Written) Twenty Nine Thousand Seven Hundred Fifty Dollars and zero Cents $ 29,750.00

Bid Item No. 4 – Sewer Connections

For furnishing all supervision, labor, materials, tools, equipment, supervision and incidentals required to install sewer pipe connections including all work as described in Section 01020, and in detailed in Section 02200, and Section 02375, the following unit prices of:

Item No.	Quantity with Units	Item Description with Unit Price (in Words)	Unit Price (in Figures)	Total
4A	100 EA	Connecting Lateral to Sewer (Wye Branch) (Written) Fifteen Hundred Dollars And zero Cents Per Each	$1,500.00 Per Each	$150,000.00
4B	50 EA	Connecting Sewer to Sewer (Elastomeric Sleeve) (Written) Twelve Hundred Dollars And zero Cents Per Each	$1,200.00 Per Each	$60,000.00
4C	25 EA	Connecting Sewer To Existing Manhole (Written) Twelve Hundred Dollars And zero Cents Per Each	$1,200.00 Per Each	$30,000.00

Item No.	Quantity with Units	Item Description with Unit Price (in Words)	Unit Price (in Figures)	Total
4D	1 EA	Manhole Coring (8" – 12" Sewer) (Written) Seven Hundred Fifty Dollars And zero Cents Per Each	$ 750.00 Per Each	$ 750.00
4E	1 EA	Manhole Coring (>12" – 24" Sewer) (Written) Seven Hundred Fifty Dollars And zero Cents Per Each	$ 750.00 Per Each	$ 750.00
4F	1 EA	Manhole Coring (>24" – 42" Sewer) (Written) Thirty Five Hundred Dollars And zero Cents Per Each	$ 3,500.00 Per Each	$ 3,500.00
4G	1 EA	Connecting Storm Lateral to Existing Catch Basin (Written) Twelve Hundred Fifty Dollars And zero Cents Per Each	$1,250.00 Per Each	$ 1,250.00

*Total for Bid Item No. 4 (Written) Two Hundred Forty Six Thousand Two Hundred Fifty Dollars and zero Cents $ 246,250.00

Bid Item No. 5 – Standard Manholes

For furnishing all supervision, labor, materials, tools and equipment required to install standard manholes including all work as described in Section 01020, and in detailed in Section 02200, and as detailed in Section 02376, the following unit prices per vertical linear foot:

Item No.	Quantity with Units	Item Description with Unit Price (in Words)	Unit Price (in Figures)	Total
5A	50 VLF	4' Diameter Standard Manhole (Written) Eight Hundred Sixty Dollars And Zero Cents Per VLF	$ 860.00 Per VLF	$43,000.00
5B	10 VLF	5' Diameter Standard Manhole (Written) one Thousand one Hundred Fifty Eight Dollars And Zero Cents Per VLF	$1,158.00 Per VLF	$ 11,580.00
5C	10 VLF	6' Diameter Standard Manhole (Written) one Thousand Three Hundred Sixty Five Dollars And Zero Cents Per VLF	$ 1,365.00 Per VLF	$13,650.00

Item No.	Quantity	Item Description with Unit Price (in Words)	Unit Price (in Figures)	Total
5D	10 VLF	8' Diameter Standard Manhole one Thousand Eight Hundred (Written) Fifty Five Dollars And zero Cents Per VLF	$ 1,855.00 Per VLF	$ 18,550.00

*Total for Bid Item No. 5 (Written) Eighty Six Thousand Seven Hundred Eighty Dollars and zero Cents $ 86,780.00

Bid Item No. 6 – Precast Concrete Catch Basin

For furnishing all supervision, labor, materials, tools, equipment and incidentals required to install precast concrete catch basins and including all work described in Section 01020, the following unit price per vertical linear foot of

Item No.	Quantity	Item Description with Unit Price (in Words)	Unit Price (in Figures)	Total
6	10 VLF	Precast Concrete Catch Basin Eight Hundred (Written) Twenty Four Dollars And zero Cents Per VLF	$ 824.00 Per VLF	$ 8,240.00

*Total for Bid Item No. 6 (Written) Eight Thousand Two Hundred Forty Dollars and zero Cents $ 8,240.00

Bid Item No. 7 – Pavement Replacement / Restoration

For furnishing all supervision, labor, materials, tools and equipment required to remove and replace pavement or road shoulder, as described in Section 01020, and as detailed, the following prices per square foot:

Item No.	Quantity with Units	Item Description with Unit Price (in Words)	Unit Price (in Figures)	Total
7A	100 SF	Heavy Duty Pavement Restoration (Less than 50 SF) (Written) Twenty Five Dollars And zero Cents Per SF	$ 25.00 Per SF	$ 2,500.00
7B	1,000 SF	Heavy Duty Pavement Restoration (50 SF – 249.9 SF) (Written) Twenty Four Dollars And zero Cents Per SF	$ 24.00 Per SF	$ 24,000.00
7C	1,500 SF	Heavy Duty Pavement Restoration (250 SF – 499.9 SF) (Written) Twenty Three Dollars And zero Cents Per SF	$ 23.00 Per SF	$ 34,500.00

Item No.	Quantity with Units	Item Description with Unit Price (in Words)	Unit Price (in Figures)	Total
7D	3,000 SF	Heavy Duty Pavement Restoration (500 SF and greater) (Written) Twenty Dollars And zero Cents Per SF	$ 20.00 Per SF	$ 60,000.00
7E	100 SF	Medium Duty Pavement Restoration (Less than 50 SF) (Written) Twenty Two Dollars And zero Cents Per SF	$ 22.00 Per SF	$ 2,200.00
7F	1,000 SF	Medium Duty Pavement Restoration (50 SF – 249.9 SF) (Written) Twenty One Dollars And zero Cents Per SF	$ 21,00 Per SF	$ 21.000.00
7G	1,500 SF	Medium Duty Pavement Restoration (250 SF – 499.9 SF) (Written) Twenty Dollars And zero Cents Per SF	$ 20.00 Per SF	$ 30,000.00

Item No.	Quantity with Units	Item Description with Unit Price (in Words)	Unit Price (in Figures)	Total
7H	5,000	Medium Duty Pavement Restoration (500 SF and greater) (Written) Nineteen Dollars And zero Cents Per SF	$ 19.00 Per SF	$ 95,000.00
7I	100	Light Duty Pavement Restoration (Less than 50 SF) (Written) Eighteen Dollars And zero Cents Per SF	$ 18.00 Per SF	$ 1,800.00
7J	100	Light Duty Pavement Restoration (50 SF – 249.9 SF) (Written) Eighteen Dollars And zero Cents Per SF	$ 18.00 Per SF	$ 1,800.00
7K	500	Light Duty Pavement Restoration (250 SF – 499.9 SF) (Written) Fourteen Dollars And zero Cents Per SF	$ 14.00 Per SF	$ 7,000.00

Item No.	Quantity with Units	Item Description with Unit Price (in Words)	Unit Price (in Figures)	Total
7L	500	Light Duty Pavement Restoration (500 SF and greater) (Written) Fourteen Dollars And zero Cents Per SF	$ 14.00 Per SF	$ 7,000.00
7M	100	Concrete Base Pavement Restoration (Less than 50 SF) (Written) Twenty Eight Dollars And zero Cents Per SF	$ 28.00 Per SF	$ 1,400.00
7N	1,000	Concrete Base Pavement Restoration (50 SF – 249.9 SF) (Written) Sixteen Dollars And zero Cents Per SF	$ 16.00 Per SF	$ 16,000.00
7O	1,500	Concrete Base Pavement Restoration (250 SF – 499.9 SF) (Written) Fourteen Dollars And zero Cents Per SF	$ 14.00 Per SF	$ 21,000.00

Item No.	Quantity with Units	Item Description with Unit Price (in Words)	Unit Price (in Figures)	Total
7P	1,500 SF	Concrete Base Pavement Restoration (500 SF and greater)		
		(Written) Fourteen Dollars		
		And zero Cents Per SF	$ 14.00 Per SF	$ 21,000.00

*Total for Bid Item No. 7 (Written) Three Hundred Forty Six Thousand Two Hundred Dollars and zero Cents $ 346,200.00

SUBTOTAL PART 1 – CONTRACTOR BID PRICES

*SubTotal for Part 1 (Items 1 through 7): (Written) Two Million Twenty One Thousand Six Hundred Thirty Five Dollars and zero Cents $ 2,021,635.00

PART 2 – MINIMUM BID PRICES

Note: The following bid items are provided with minimum unit bid pricing. Higher prices may be submitted for these bid items by writing higher unit prices in numbers and words and recalculating the totals. If a higher amount is not written in the space provided, the minimum amounts will be used. The bid amounts for these items will be included as part of the total bid tabulation.

Bid Item No. 8 – Miscellaneous Pavement Restoration

For furnishing all supervision, labor, materials, tools and equipment required to remove and replace pavement or road shoulder, as described in Section 01020, the following prices per linear foot:

Item No.	Quantity with Units	Item Description with Unit Price (in Words)	Unit Price (in Figures)	Total
8A	500 SF	Miscellaneous Cold Milling of Asphalt Concrete		
		(Written) Two Dollars And Fifty Cents Per SF	$ 2.50 Per SF	$ 1,250.00
Minimum Bid:		**One** Dollars And **Zero** Cents Per SF	$ **1.00** Per SF	$ **500.00**
8B	500 SF	1-1/2" Top Course Asphalt Concrete Pavement Restoration in areas of cold miling only		
		(Written) Three Dollars And Zero Cents Per SF	$ 3.00 Per SF	$ 1,500.00
Minimum Bid:		**One** Dollars And **Zero** Cents Per SF	$ **1.00** Per SF	$ **500.00**

Item No.	Quantity with Units	Item Description with Unit Price (in Words)	Unit Price (in Figures)	Total
8C	500 SF	Temporary Pavement Patch (Asphalt)		
		(Written) Six Dollars		
		And zero Cents	$ 6.00	$ 3,000.00
		Per SF	Per SF	
Minimum Bid:		**Three** Dollars And **Zero** Cents	$ **3.00**	$ **1,500.00**
		Per SF	Per SF	
8D	500 SF	Temporary Pavement Patch (Concrete)		
		(Written) Six Dollars		
		And zero Cents	$ 6.00	$ 3,000.00
		Per SF	Per SF	
Minimum Bid:		**Four** Dollars And **Zero** Cents	$ **4.00**	$ **2,000.00**
		Per SF	Per SF	
8E	500 SF	Shoulder Replacement		
		(Written) Twenty Five Dollars		
		And zero Cents	$ 25.00	$ 12,500.00
		Per SF	Per SF	
Minimum Bid:		**Fifteen** Dollars And **Zero** Cents	$ **15.00**	$ **7,500.00**
		Per SF	Per SF	

Twenty One Thousand

*Total Amount for Bid Item No. 8 (Written) Two Hundred Fifty dollars and zero cents $ 21,250.00

*Total **Minimum** Amount for Bid Item No. 8 (Written) **Twelve Thousand Dollars and Zero Cents** $ **12,000.00**

Bid Item No. 9 – Drop Manhole Pipe Assemblies

For furnishing all supervision, labor, materials, tools, equipment and incidentals required to construct drop manhole pipe assemblies of various diameters including all work as described in Section 01020, the following unit prices of:

Item No.	Quantity with Units	Item Description with Unit Price (in Words)	Unit Price (in Figures)	Total
9A	1 EA	Drop Manhole Pipe Assemblies (8" Sewer)		
		Fifteen Hundred (Written) Dollars		
		And Zero Cents Per Each	$ 1,500.00 Per Each	$ 1,500.00
Minimum Bid:		**Five Hundred** Dollars And **Zero** Cents Per Each	$ **500.00** Per Each	$ **500.00**
9B	1 EA	Drop Manhole Pipe Assemblies (10" Sewer)		
		Fifteen Hundred (Written) Dollars		
		And Zero Cents Per Each	$ 1,500.00 Per Each	$ 1,500.00
Minimum Bid:		**Five Hundred** Dollars And **Zero** Cents Per Each	$ **500.00** Per Each	$ **500.00**

Item No.	Quantity with Units	Item Description with Unit Price (in Words)	Unit Price (in Figures)	Total
9C	1 EA	Drop Manhole Pipe Assemblies (12" Sewer)		
		Seventeen Hundred Fifty (Written) Dollars		
		And zero Cents Per Each	$ 1,750.00 Per Each	$ 1,750.00
Minimum Bid:		**Seven Hundred and Fifty** Dollars And **Zero** Cents Per Each	$ **750.00** Per Each	$ **750.00**
9D	1 EA	Drop Manhole Pipe Assemblies (15" Sewer)		
		Two Thousand (Written) Dollars		
		And zero Cents Per Each	$ 2,000.00 Per Each	$ 2,000.00
Minimum Bid:		**One Thousand** Dollars And **Zero** Cents Per Each	$ **1,000.00** Per Each	$ **1,000.00**

*Total Amount for Bid Item No. 9 (Written) Six Thousand Seven Hundred Fifty dollars and zero cents $ 6,750.00

*Total **Minimum** Amount for Bid Item No. 9 (Written) **Two Thousand, Seven Hundred and Fifty Dollars and Zero Cents**
$ **2,750.00**

Bid Item No. 10 – Concrete Cradle and Encasement

For furnishing all supervision, labor, materials, tools and equipment required to install concrete cradle and encasement including all work as described in Section 01020, and as detailed, the unit price per cubic yard:

Item No.	Quantity with Units	Item Description with Unit Price (in Words)	Unit Price (in Figures)	Total
10	5 CY	Concrete Cradle and Encasement (Written) Three Hundred Dollars And Zero Cents Per CY	$ 300.00 Per CY	$ 1,500.00
Minimum Bid:		**Eighty** Dollars And **Zero** Cents Per CY	$ **80.00** Per CY	$ **400.00**

*Total Amount for Bid Item No. 10 (Written) Fifteen Hundred dollars and zero cents $ 1,500.00

*Total **Minimum** Amount for Bid Item No. 10 (Written) **Four Hundred Dollars and Zero Cents** $ **400.00**

Bid Item No. 11 – Additional Crushed Stone Bedding

For furnishing and placing crushed stone bedding as described in Section 01020, the unit price per cubic yard:

Item No.	Quantity with Units	Item Description with Unit Price (in Words)	Unit Price (in Figures)	Total
11	50 CY	Additional Crushed Stone Bedding (Written) Forty Five Dollars Forty Five dollars and zero cents	45.00	2,250.00

	And zero Cents Per CY	$ 45.00 Per CY	$ 2,250.00
Minimum Bid:	**Twelve** Dollars And **Zero** Cents Per CY	$ **12.00** Per CY	$ **600.00**

*Total Amount for Bid Item No. 11 (Written) Two Thousand Two Hundred Fifty dollars zero cents $ 2,250.00

*Total **Minimum** Amount for Bid Item No. 11 (Written) **Six Hundred Dollars and Zero Cents** $ **600.00**

Bid Item No. 12 – Additional Select Material Backfill

For furnishing and placing select material backfill as described in Section 01020, the unit price per cubic yard of:

Item No.	Quantity with Units	Item Description with Unit Price (in Words)	Unit Price (in Figures)	Total
12	250 CY	Additional Select Material Backfill (Written) Ten Thousand Dollars		
		And zero Cents Per CY	$ 40.00 Per CY	$ 10,000.00
		Minimum Bid: **Ten** Dollars And **Zero** Cents Per CY	$ **10.00** Per CY	$ **2,500.00**

*Total Amount for Bid Item No. 12 (Written) Ten Thousand dollars and zero cents $ 10,000.00

*Total **Minimum** Amount for Bid Item No. 12 (Written) **Two Thousand, Five Hundred Dollars and Zero Cents** $**2,500.00**

Bid Item No. 13 – Additional Stone for Undercut

For furnishing all supervision, labor, materials, tools and equipment required to install additional stone and geotextile fabric in undercut areas as described in Section 01020 for the following unit prices per cubic yard:

Item No.	Quantity with Units	Item Description with Unit Price (in Words)	Unit Price (in Figures)	Total
13	50 CY	Additional Stone for Undercut		
		(Written) Forty Dollars And zero Cents Per CY	$ 40.00 Per CY	$ 2,000.00
Minimum Bid:		**Ten** Dollars And **Zero** Cents Per CY	$ **10.00** Per CY	$ **500.00**

*Total Amount for Bid Item No. 13 (Written) Two Thousand dollars and zero cents $ 2,000.00

*Total **Minimum** Amount for Bid Item No. 13 (Written) **Five Hundred Dollars and Zero Cents** $ **500.00**

Bid Item No. 14 – Rock Excavation

For furnishing all supervision, labor, materials, tools and equipment required to excavate rock, including all work as described in Section 01020 and as detailed in Section 02200, the following price per cubic yard of:

Item No.	Quantity with Units	Item Description with Unit Price (in Words)	Unit Price (in Figures)	Total
14	120 CY	Rock Excavation		
		One Hundred Thirty Five (Written) Dollars		

And zero Cents $ 135.00 $ 16,200.00
Per CY Per CY

Minimum Bid: **Fifty** Dollars And **Zero** Cents $ **50.00** $ **6,000.00**
Per CY Per CY

*Total Amount for Bid Item No. 14 (Written) Sixteen Thousand Two Hundred dollars zero cents $ 16,200.00

*Total **Minimum** Amount for Bid Item No. 14 (Written) **Six Thousand Dollars and Zero Cents** $ **6,000.00**

Bid Item No. 15 – Test Pit Excavation

For furnishing all supervision, labor, materials, tools, equipment and incidentals required to excavate and backfill utility test pits at the locations shown on the Plans, including all work as described in Section 01020, the following unit price per each of:

Item No.	Quantity with Units	Item Description with Unit Price (in Words)	Unit Price (in Figures)	Total
15	4 EA	Test Pit Excavation		
		(Written) Five hundred Dollars		
		And zero Cents	$ 500.00	$ 2,000.00
		Per Each	Per Each	
Minimum Bid:		**Five Hundred** Dollars And **Zero** Cents	$ **500.00**	$ **2,000.00**
		Per Each	Per Each	

*Total Amount for Bid Item No. 15 (Written) Two Thousand dollars and zero cents $ 2,000.00

*Total **Minimum** Amount for Bid Item No. 15 (Written) **Two Thousand Dollars and Zero Cents** $ **2,000.00**

Bid Item No. 16 – Sewer Abandonment

For furnishing all supervision, labor, materials, tools, equipment and incidentals required to fill the abandon sewer and manholes as detailed on the Plans and including all work as described in Section 01020, and as detailed in Section 02900, the following unit prices:

Item No.	Quantity with Units	Item Description with Unit Price (in Words)	Unit Price (in Figures)	Total
16A	10 EA	Abandon Existing Sewer – Bulkhead/Plug		
		(Written) Fifty Dollars		
		And zero Cents	$ 50.00	$ 500.00
		Per Each	Per Each	
Minimum Bid:		**Twenty Five** Dollars And **Zero** Cents	$ **25.00**	$ **250.00**
		Per Each	Per Each	
16B	10 EA	Abandon Existing Sewer – Filling of Voids		
		(Written) one Hundred Five Dollars		
		And zero Cents	$ 105.00	$ 1,050.00
		Per CY	Per CY	
Minimum Bid:		**Sixty** Dollars And **Zero** Cents	$ **60.00**	$ **600.00**
		Per Each	Per Each	

Item No.	Quantity with Units	Item Description with Unit Price (in Words)	Unit Price (in Figures)	Total
16C	2 EA	Abandon Existing Sewer – Manholes		
		Twelve Hundred Fifty (Written) Dollars		
		And Zero Cents Per Each	$ 1,250.00 Per Each	$ 1,250.00
Minimum Bid:		**Two Hundred** Dollars And **Zero** Cents Per Each	$ **200.00** Per Each	$ **400.00**

*Total Amount for Bid Item No. 16 (Written) Twenty Eight Hundred dollars and zero cents $ 2,800.00

*Total **Minimum** Amount for Bid Item No. 16 (Written) **One Thousand, Two Hundred and Fifty Dollars and Zero Cents**
$ **1,250.00**

Bid Item No. 17 – Sidewalk/Driveway Replacement

For furnishing all supervision, labor, materials, tools and equipment required to remove or replace sidewalks and driveways, as described in Section 01020, and as detailed, the following prices per square foot:

Item No.	Quantity with Units	Item Description with Unit Price (in Words)	Unit Price (in Figures)	Total
17A	500 SF	Concrete Sidewalk Restoration		
		(Written) Ten Dollars		
		And zero Cents	$ 10.00	$ 5,000.00
		Per SF	Per SF	
Minimum Bid:		**Six** Dollars And **Zero** Cents	$ **6.00**	$ **3,000.00**
		Per SF	Per SF	
17B	100 SF	Concrete Driveway Restoration		
		(Written) Twelve Dollars		
		And zero Cents	$ 12.00	$ 1,200.00
		Per SF	Per SF	
Minimum Bid:		**Six** Dollars And **Zero** Cents	$ **6.00**	$ **600.00**
		Per SF	Per SF	

Item No.	Quantity with Units	Item Description with Unit Price (in Words)	Unit Price (in Figures)	Total
17C	100 SF	Asphalt Driveway Restoration – Light Duty (≤ 4.5" thick total)		
		(Written) Eight Dollars		
		And zero Cents Per SF	$ 8.00 Per SF	$ 800.00
Minimum Bid:		**Five** Dollars And **Zero** Cents Per SF	$ **5.00** Per SF	$ **500.00**
17D	500 SF	Asphalt Driveway Restoration – Medium Duty (> 4.5" thick total)		
		(Written) Ten Dollars		
		And zero Cents Per SF	$ 10.00 Per SF	$ 5,000.00
Minimum Bid:		**Six** Dollars And **Zero** Cents Per SF	$ **6.00** Per SF	$ **3,000.00**
17E	100 SF	Reset Existing Brick Pavers/ Stone Sidewalk		
		(Written) Thirty Dollars		
		And zero Cents Per SF	$ 30.00 Per SF	$ 3,000.00
Minimum Bid:		**Twenty** Dollars And **Zero** Cents Per SF	$ **20.00** Per SF	$ **2,000.00**

*Total Amount for Bid Item No. 17 (Written) Fifteen Thousand dollars and zero cents $ 15,000.00

*Total **Minimum** Amount for Bid Item No. 17 (Written) **Nine Thousand One Hundred Dollars and Zero Cents** $ **9,100.00**

Bid Item No. 18 – Concrete Gutter Restoration

For furnishing all supervision, labor, materials, tools, equipment and incidentals required to replace existing concrete gutter, or install new concrete gutters and including all work described in Section 01020, the following unit price per linear foot:

Item No.	Quantity with Units	Item Description with Unit Price (in Words)	Unit Price (in Figures)	Total
18	50 LF	Concrete Gutter Restoration		
		(Written) Fifty Dollars And zero Cents Per LF	$ 50.00 Per LF	$ 2,500.00
Minimum Bid:		**Twenty** Dollars And **Zero** Cents Per LF	$ **20.00** Per LF	$ **1,000.00**

*Total Amount for Bid Item No. 18 (Written) Twenty Five hundred dollars zero cents $ 2,500.00

*Total **Minimum** Amount for Bid Item No. 18 (Written) **One Thousand Dollars and Zero Cents** $ **1,000.00**

Bid Item No. 19 – Turf Restoration

For furnishing all supervision, labor, materials, tools, equipment and incidentals required to restore areas disturbed by construction, including all work as described in Section 01020, the following unit price per square foot of:

Item No.	Quantity with Units	Item Description with Unit Price (in Words)	Unit Price (in Figures)	Total
19	9,000 SF	Turf Restoration		
		(Written) zero Dollars		
		And Seventy Five Cents Per SF	$ 0.75 Per SF	$ 6,750.00
Minimum Bid:		**Zero** Dollars And **Seventy Five** Cents Per LF	$ **0.75** Per LF	$ **6,750.00**

*Total Amount for Bid Item No. 19 (Written) Six Thousand Seven ~~Six~~ Hundred Fifty dollars zero cents $ 6,750.00

*Total **Minimum** Amount for Bid Item No. 19 (Written) **Six Thousand and Fifty Dollars and Zero Cents** $ **6,750.00**

Bid Item No. 20 – Curb Replacement

For furnishing all supervision, labor, materials, tools, equipment and incidentals required to reset or replace existing curbing, or install new curbing as ordered by the Engineer, including all work as described in Section 01020, the following unit price per linear feet of:

Item No.	Quantity with Units	Item Description with Unit Price (in Words)	Unit Price (in Figures)	Total
20A	100 LF	Concrete Curbing Replacement		
		(Written) Forty Five Dollars		
		And Zero Cents Per LF	$ 45.00 Per LF	$ 4,500.00
Minimum Bid:		**Twenty** Dollars And **Zero** Cents Per LF	$ **20.00** Per LF	$ **2,000.00**
20B	25 LF	New Stone Curbing Replacement		
		(Written) Fifty Dollars		
		And Zero Cents Per LF	$ 50.00 Per LF	$ 1,250.00
Minimum Bid:		**Twenty** Dollars And **Zero** Cents Per LF	$ **20.00** Per LF	$ **500.00**

Item No.	Quantity with Units	Item Description with Unit Price (in Words)	Unit Price (in Figures)	Total
20C	50 LF	Reset Existing Stone Curbing (Written) Thirty Five ~~Ten~~ Dollars And **Zero** Cents Per LF	$ 35.00 Per LF	$ 1,750.00
Minimum Bid:		**Ten** Dollars And **Zero** Cents Per LF	$ **10.00** Per LF	$ **500.00**

*Total Amount for Bid Item No. 20 (Written) Seven Thousand Five Hundred dollars and zero cents $ 7,500.00

*Total Minimum Amount for Bid Item No. 20 (Written) **Three Thousand Dollars and Zero Cents** $ **3,000.00**

Bid Item No. 21 – Pavement Striping

For furnishing all supervision, labor, materials, tools, equipment, services and incidentals necessary to replace pavement striping, including all work as described in Section 01020, the following unit prices of:

Item No.	Quantity with Units	Item Description with Unit Price (in Words)	Unit Price (in Figures)	Total
21A	100 LF	Pavement Striping		
		(Written) Nine Dollars		
		And zero Cents Per LF	$ 9.00 Per LF	$ 900.00
Minimum Bid:		**Two** Dollars And **Zero** Cents Per LF	$ **2.00** Per LF	$ **200.00**
21B	5 Each	Pavement Letter/ Symbol		
		(Written) Thirty Five Dollars		
		And zero Cents Per Each	$ 35.00 Per Each	$ 175.00
Minimum Bid:		**Twenty** Dollars And **Zero** Cents Per Each	$ **20.00** Per Each	$ **100.00**

*Total Amount for Bid Item No. 21 (Written) one Thousand Seventy Five dollars and zero cents $ 1,075.00

*Total **Minimum** Amount for Bid Item No. 21 (Written) **Three Hundred Dollars and Zero Cents** $ **300.00**

P-7-38R

Bid Item No. 22 – Manhole Adjustment, 0-1 Feet

For furnishing all supervision, labor, materials, tools and equipment required to adjust existing manhole rims as ordered by the Engineer, and including all work as described in Section 01020, the following unit price of:

Item No.	Quantity with Units	Item Description with Unit Price (in Words)	Unit Price (in Figures)	Total
22	25 EA	Manhole Adjustment, 0-1 Feet		
		(Written) Four Hundred Fifty Dollars And Zero Cents Per Each	$ 450.00 Per Each	$ 11,250.00
Minimum Bid:		**Two Hundred** Dollars And **Zero** Cents Per Each	$ **200.00** Per Each	$ **5,000.00**

*Total Amount for Bid Item No. 22 (Written) Eleven Thousand Two Hundred Fifty dollars and zero cents $ 11,250.00

*Total **Minimum** Amount for Bid Item No. 22 (Written) **Five Thousand Dollars and Zero Cents** $ **5,000.00**

Bid Item No. 23 – Catch Basin Adjustment, 0-1 Feet

For furnishing all supervision, labor, materials, tools and equipment required to adjust existing catch basin elevations as ordered by the Engineer, and including all work as described in Section 01020, the following unit price of

Item No.	Quantity with Units	Item Description with Unit Price (in Words)	Unit Price (in Figures)	Total
23	1	Catch Basin Adjustment, 0-1 Feet		
		(Written) Four Hundred Fifty Dollars		
		And Zero Cents	$ 450.00	$ 450.00
		Per Each	Per Each	
Minimum Bid:		**Two Hundred** Dollars And **Zero** Cents	$ **200.00**	$ **200.00**
		Per Each	Per Each	

*Total Amount for Bid Item No. 23 (Written) Four Hundred Fifty dollars and zero cents $ 450.00

*Total **Minimum** Amount for Bid Item No. 23 (Written) **Two Hundred Dollars and Zero Cents** $ **200.00**

Bid Item No. 24 – Support of Utilities Crossing Excavation Trench

For furnishing all supervision, labor, materials, tools, equipment and incidentals required to support utilities crossing the excavation trench, and including all work as described in Section 01020, the following unit prices of:

Item No.	Quantity with Units	Item Description with Unit Price (in Words)	Unit Price (in Figures)	Total
24A	10	Support of Utilities Crossing Excavation Trench (4" to <8" Dia. Utility) Two Hundred (Written) Dollars And zero Cents Per Each	$ 200.00 Per Each	$ 2,000.00
Minimum Bid:		**One Hundred** Dollars And **Zero** Cents Per Each	$ **100.00** Per Each	$ **1,000.00**
24B	10	Support of Utilities Crossing Excavation Trench (8" or > Dia. Utility) Four Hundred (Written) Dollars And zero Cents Per Each	$ 400.00 Per Each	$ 4,000.00
Minimum Bid:		**Two Hundred** Dollars And **Zero** Cents Per Each	$ **200.00** Per Each	$ **2,000.00**

Item No.	Quantity with Units	Item Description with Unit Price (in Words)	Unit Price (in Figures)	Total
24C	100	Temporary Tight Sheeting for Utility Support		
		(Written) Ten Dollars		
		And zero Cents Per SF	$ 10.00 Per SF	$ 1,000.00
Minimum Bid:		**Three** Dollars And **Zero** Cents Per SF	$ **3.00** Per SF	$ **300.00**

*Total Amount for Bid Item No. 24 (Written) Seven Thousand dollars zero cents $ 7,000.00

*Total **Minimum** Amount for Bid Item No. 24 (Written) **Three Thousand Three Hundred Dollars and Zero Cents**
$ **3,300.00**

SUBTOTAL PART 2 – MINIMUM BID PRICES

*SubTotal for Part 2 (Items 8 through 24) (Written) **Fifty Six Thousand, Six Hundred and Fifty Dollars and Zero Cents**
$ **56,650.00**

PART 3 – FIXED BID PRICES (DO NOT CHANGE)

Bid Item No. 25 – Downtime (Directed by Owner)

For downtime (temporary stop work period) directed by the Owner, the following unit price per each hour shall be:

Item No.	Quantity with Units	Item Description with Unit Price (in Words)	Unit Price (in Figures)	Total
25	1 Hour	Downtime (Directed by Owner) (Written) **Five Hundred** Dollars And **Zero** Cents Per Hour	$ **500.00** Per Hour	$ **500.00**

*Total for Bid Item No. 25 (Written) **Five Hundred Dollars and Zero Cents** $ **500.00**

Bid Item No. 26 – Mobilization (Directed by Owner)

For mobilizations directed by the Owner, the following unit price per each hour shall be:

Item No.	Quantity with Units	Item Description with Unit Price (in Words)	Unit Price (in Figures)	Total
26A	2 Hours	Mobilization (Directed by Owner) (Written) **Two Hundred and Fifty** Dollars And **Zero** Cents Per Hour	$ **250.00** Per Hour	$ **500.00**

26B 1 Each Less Than 4 Hours Mobilization (Directed by Owner)

(Written) **One Thousand, Five Hundred** Dollars

And **Zero** Cents $ **1,500.00** **$ 1,500.00**
Per Each Per Each

*Total for Bid Item No. 26 (Written) **Two Thousand Dollars and Zero Cents** $ **2,000.00**

Bid Item No. 27 – Contingent Items

The following stipulated allowance shall be included in each and every bid and is to be utilized in paying for unspecified additional work:

For furnishing all supervision, labor, materials, tools, equipment and incidentals required to perform unspecified additional work, as described in Section 01020, the following allowance has been established:

*Total for Bid Item No. 27 (Written) **Five Thousand Dollars and Zero Cents** $ **5,000.00**

SUBTOTAL PART 3 – FIXED BID PRICES

*SubTotal for Part 3 (Items 25 through 27) (Written) **Seven Thousand, Five Hundred Dollars and Zero Cents**
$ **7,500.00**

TOTAL AMOUNT OF BID/BASIS OF AWARD

Sum of totals of Parts 1, 2, and 3 inclusive: (Written) Two Million One Hundred Forty Five Thousand Four Hundred Ten dollars and zero cents Dollars $ 2,145,410.00

Note: In case of a discrepancy between the unit or lump sum prices written in words and in figures, the unit or lump sum prices written in words shall govern. In case of a discrepancy between unit prices bid and extended totals, the unit prices will govern.

WAIVER OF IMMUNITY CERTIFICATION

This is to CERTIFY that neither the undersigned nor any member, partner, director, or officer of the firm has refused to sign a waiver of immunity against subsequent criminal prosecution or to answer any relevant question concerning a transaction or contract with the state or any political subdivision thereof, a public authority or with a public department, agency or official of the state or of any policitcal subdivision thereof or of a public authority, when called before a grand jury, head of a state department, temporary state commission, or other state agency, the organized crime task force in the department of law, head of a city department or other city agency, which is empowered to compel the attendance of witnesses and examine them under oath.

(CORPORATE SEAL)
(If bid is by a Corporation)

By: Dave V
Contractor's Signature

Visone Construction
Business Name

Name: Dave Visone
Typed or Printed Name

Date: 7.27.17

Title: President

CERTIFICATION
FOR
CONTRACTS, GRANTS, LOANS, AND
COOPERATIVE AGREEMENTS
40 CFR 34

The undersigned certifies, to the best of his or her knowledge and belief, that:

(1) No Federal appropriated funds have been paid or will be paid, by or on behalf of the undersigned, to any person for influencing or attempting to influence an officer or employee of any agency, a Member of Congress, an officer or employee of Congress, or an employee of a Member of Congress in connection with the awarding of any Federal contract, the making of any Federal grant, the making of any Federal loan, the entering into of any cooperative agreement, and the extension, continuation, renewal, amendment, or modification of any Federal contract, grant, loan, or cooperative agreement.

(2) If any funds other than Federal appropriated funds have been paid or will be paid to any person for influencing or attempting to influence an officer or employee of any agency, a Member of Congress in connection with this Federal contract, grant, loan, or cooperative agreement, the undersigned shall complete and submit Standard Form-LLL, "Disclosure Form to Report Lobbying," in accordance with its instructions.

(3) The undersigned shall require that the language of this certification be included in the award documents for all sub-awards at all tiers (including sub-contracts, sub-grants, and contracts under grant, loans, and cooperative agreements) and that all sub-recipients shall certify and disclose accordingly.

This certification is a material representation of fact upon which reliance was placed when this transaction was made or entered into. Submission of this certification is a prerequisite for making or entering into this transaction imposed by section 1352, title 31 U.S. Code. Any person who fails to file the required certification shall be subject to a civil penalty of not less than $10,000 and not more than $100,000 for each such failure.

By: Dave Visone
Contractor's Signature

Visone Construction, Inc
Business Name

Name: Dave Visone
Typed or Printed Name

Date: 7-27-17

Title: President

UNIFORM CERTIFICATE OF ACKNOWLEDGEMENT

STATE OF NEW YORK)
: ss
COUNTY OF Erie)

On the 27 day of July, in the year 2017 before me, the undersigned, personally appeared David Usborne, personally known to me or proved to me on the basis of satisfactory evidence to be the individual(s) whose name(s) is (are) subscribed to the within instrument and acknowledged to me that he/she/they execute the same n his/her/their capacity(ies), and that by his/her/their signature(s) on the instrument, the individual(s), or the person upon behalf of which the individual(s) acted, executed the instrument.

Christine J. Kempski

CHRISTINE J. KEMPSKI
Notary Public, State of New York
Qualified in Erie County
My Commission Expires 11/20/2018

CERTIFICATE OF EXPERIENCE

I, Dave Visone, hereby certify that Visone Construction Inc. (Name of Bidder) has performed the following work within the last five (5) years.

Owner	Amount of Contract	Type of Work	Name of Owner's Engineer In Charge of Work	Complete Mailing Address And Telephone Number of Engineer
1	2	3	4	5
		See Attached		

Visone Construction, Inc
(Name of Bidder)

By [signature]

Title President

Witness [signature]

Date 7.27.17

IMPORTANT: THIS FORM MUST BE FILLED IN BY THE BIDDER. COMPLETE NAME, ADDRESS AND TELEPHONE NUMBER OF EACH REFERENCE MUST BE FURNISHED UNDER COLUMNS 4 & 5

GENERAL

1. INTRODUCTIONS

The purpose of these General Contract Conditions is to set forth the general manner under which the Owner, Contractor and Engineer will execute the Contract. The provisions of the Specific Conditions of the Contract will modify the requirements of the General Conditions as hereinafter stated.

2. CONTRACT AND CONTRACT DOCUMENTS

The Plans, Specifications, Construction Terms and Conditions, and Addenda, hereinafter enumerated, shall form a part of this Contract and the provisions thereof shall be as binding upon the parties hereto as if they were herein fully set forth. The Table of Contents, Titles, Headings, Running Headlines, and Marginal notes contained herein and in said Documents are solely to facilitate references to various provisions of the Contract Documents and in no way affect, limit, or cast light on the interpretation of the provisions to which they refer. Wherever the term "Contract Documents" is used, it shall mean and include the Notice to Bidders, Instructions to Bidders, Proposal, Contract, General and Specific Contract Conditions, Contract and Bid Bonds, Plans or Drawings, Specifications, Addenda, and any and all other writings necessary to complete the project.

3. INTENT OF DOCUMENTS AND INSTRUCTIONS

The Specifications, Drawings, and any Instructions as set forth herein are complementary, are intended to cooperate and provide for, and include everything necessary for, the proper and complete orderly execution and finishing of the work. Any work shown on the drawings concerning which there are no particular specification, or the omission from both drawings and specifications of express reference to any work which obviously was intended under the Contract, shall not excuse or relieve the Contractor or Subcontractor from furnishing the same. Work or materials described in words which have a well known technical or trade meaning, shall be interpreted by such customary and recognized standard of meaning.

It is understood that except as otherwise specifically stated in the Contract Documents, all Contractors shall provide and pay for all permits, materials, labor, tools, equipment, water, light, power, transportation, superintendence, temporary construction of every nature, and all other services and facilities of every nature under his contract whatsoever necessary to execute, complete and deliver the work within the specified time.

The sum of the various bid items is intended to provide a complete contract, as proposed by the Plans and Specifications, tested and ready for use.

4. DEFINITIONS

A. The term "Subcontractor" includes only those having a direct contract with the Contractor, and it does not include one who furnished material worked to a special design

according to the Drawings or Specifications or one who merely furnished material not so worked.

B. The term "Extra Work" as used herein refers to and includes work required by the Owner, which, in the judgement of the Engineer, involves changes in, or additions to, that required by the Plans, Specifications and Addenda in their present form.

C. In the performance of the work, the Owner shall be represented by any person designated by the Owner to perform the duties of the "Engineer". The Engineer will provide general services during construction in checking and directing the work.

D. Whenever they refer to the work or its performance, "directed", "required", "permitted", "ordered", "designated", "prescribed", and words of like importance shall imply the direction, requirements, permission, order, designation or prescription of the Engineer and "reviewed", "acceptable designate", "satisfactory", "in the judgement of", and words of like importance to, shall mean reviewed by, or acceptable to, or satisfactory to, or in the judgement of the Engineer.

E. All time limits stated in the Contract Documents are of the essence to the Contract.

5. PROVISIONS REQIURED BY LAW DEEMED INSERTED

Each and every provision of law and clauses required by law to be inserted in this Contract shall be deemed to be inserted herein, and the Contract shall be read and enforced as though it were included herein, and if through mistake, or otherwise, any such provision is not inserted, or is not correctly inserted, then upon the application of either party the Contract shall forthwith be physically amended to make such insertion or correction.

6. OTHER PROHIBITED INTERESTS

No official of the Owner who is authorized in such capacity and on behalf of the Owner to negotiate, make, accept, or review, or to take part in negotiating, making, accepting, or reviewing any architectural, engineering, observation, construction or material supply contract, or any subcontract in connection with the construction of the project, shall become directly or indirectly interested personally in this Contract, or in any part hereof. No officer, employee, architect, attorney, engineer or inspector of or for the Owner who is authorized in such capacity and on behalf of the Owner to exercise any legislative, executive, supervisory, or other similar functions in connection with the construction of the project, shall become directly or indirectly interested personally in this Contract, or in any part hereof, any material supply contract, subcontract, insurance contract, or any other contract pertaining to the project.

7. NOTICE AND SERVICE THEREOF

The service of any notice, letter or other communication, shall be deemed to have been made by one of the contracting parties on the other party to the Contract, when such letter,

notice, or other communication has been delivered to the legal office address of the addresses, by a duly authorized representative of the addressor in person, or when such notice, letter or other communication has been deposited in any regularly maintained mail box of the United States Postal Department, in a properly addressed, postpaid wrapper. The date of such service shall be considered to be the date of such personal delivery or mailing.

The address of the Contractor noted in his bid and/or the address of his field office on or near the site of the work hereunder shall be considered as his legal address for purposes as above set forth.

The address of the Owner noted in this Contract Document shall be considered as its legal address for the purpose as above set forth.

8. MODIFICATIONS

The Contractor in entering into this contract understands that the Owner reserves the right to modify the same with respect to the arrangement, character, alignment, grade or side of the work or appurtenances whenever in its opinion it shall deem it necessary or advisable so to do. The Contractor shall and will accept such modifications when ordered in writing by the Owner through the Engineer and the same shall not vitiate or void this Contract. Any such modifications so made shall not, however, subject the Contractor to increased expense without equitable compensation, which shall be determined by the Engineer. If such modifications result in a decrease in the cost of work involved, an equitable deduction from the Contract price to be determined by the Engineer shall be made. In any event, no modifications in the work shown on the Plans and described in the Specifications shall be made, unless the nature and extent thereof has first been certified by the Owner through the Engineer in writing and sent to the Contractor.

9. QUANTITIES AND AMOUNTS OF WORK

The work shown on the Plans is to be done by the Contractor for the lump sum and unit prices bid, which prices shall constitute full compensation for all work completed under the Contract, except for any additional work ordered by the Owner and issued to the Contractor in the form of a written order by the Owner through the Engineer.

The Owner reserves the right to delete such amounts or items of work form this Contract as may be necessary to finance the project from available funds.

The work included under each bid item is described in the Detailed Specifications for each Contract.

The quality of workmanship and materials entering into the work shall conform to the requirements of the pertinent provisions and sections of these Specifications.

Changes in the work, requiring more or less of any items of work, may be made upon a written change order. When changes result in the use of more or less of any specific item, additional payment or deduction will be made in accordance with the price bid for the specific

bid item. When changes result in the use of more or less of an item not specifically designated as a bid item, additional payment or deduction will be made in accordance with the price for that item as stipulated in the table of contingent items, as shown in the Form of Proposal.

10. USE OF COMPLETED PORTIONS

The Owner shall have the right to take possession of and use any completed or partially completed portion of the work, notwithstanding the time for completing the entire work or such portions which may not have expired, but taking possession and use shall not be deemed an acceptance of any work not completed in accordance with the Contract Documents. If such prior use increases the cost of or delays the work, the Contractor shall be entitled to such extra compensation or extension of time, or both, as the Engineer may determine.

Upon Occupancy by the Owner, the following procedures will apply:

1. The Engineer, with the approval of the Owner, will notify the Contractor as to what portion, or portions of the work have been accepted into Occupancy.

2. The guarantee period applicable to that portion of the work accepted into Occupancy will start as of the date of Occupancy.

3. The retained percentage applicable to that portion of the work accepted into Occupancy will remain at 5% of the value of the accepted work, until such time the Engineer and Owner deems the total project substantially complete and the Contractor submits acceptable affidavits, certificates or waivers showing no right of lien exists in connection with this portion of the work, and acceptable evidence as to the satisfaction of all claims applicable to this portion of the work.

DRAWINGS AND SPECIFICATIONS

11. CONTRACT DRAWINGS AND SPECIFICATIONS

After the Contract has been executed, the Contractor will be furnished free of cost five (5) sets of the Contract Plans and Specifications. Additional copies of the Plans and Specifications, if available, will be furnished to the Contractor at the cost of reproduction.

The Contractor shall furnish each of his subcontractors, manufacturers and materialmen, such copies of the Contract Documents as may be required for his work.

12. CHECKING PLANS

All figures and dimensions on the Drawings shall be carefully checked by the Contractor, who shall note all discrepancies. The Contractor will be held responsible for any errors not discovered before the work has been executed. In case errors are found, these shall be immediately reported to the Engineer who will instruct the Contractor as to the method of correcting them. The Contractor shall not alter Specifications, Drawings, or figures, nor make

any alternations in or additions to the quantity, character or arrangements of the materials or work, whether same shall involve additional expense or not, unless same shall be agreed upon first, in writing, as provided for herein; this provision, however, shall not abridge in any way the Engineer's rights as to the interpretation of the Specifications, Plans and figures thereon. The Plans and Specifications are complementary and what is called for by either shall be as binding as if called for by both. In all cases figures dimensions shall take precedence over scaled dimensions, and the larger scale details shall take precedence over smaller scale drawings.

13. PLANS AND SPECIFICATIONS: INTERPRETATIONS

The Contractor shall keep at the site of the work, one (1) copy of the Plans and Specifications, signed and identified by the Engineer, and shall at all times give the Engineer and other representatives of the Owner access thereto.

Any thing shown on the Plans and not mentioned in the Specifications, or mentioned in the Specifications and not shown on the Plans, have the same effect as if shown or mentioned, respectively, in both. In case of any conflict or inconsistency between the Plans and Specifications, the Specifications shall govern. Any discrepancy between the Specifications and Drawings shall be submitted by the Contractor to the Engineer. The Engineer shall in all cases determine the amount of quantity of the several kinds of work and the quality of materials which are to be paid for under this Contract; he shall determine all questions in relation to the work and the construction thereof, and in all case decide every question which may arise relative to the performance of the work covered by this Contract on the part of the Contractor. Any doubt as to the meaning of these Specifications and Drawings, or any obscurity as to the wording of them, will be explained by the Engineer and all directions and explanations requisite or necessary to complete, explain or make definite any of the provisions of these Specifications and Drawings and give them due effect, will be given by the Engineer, in writing.

The Engineer will, within a reasonable time after presentation to him, make decisions, in writing, on all matters relating to the interpretation of the Contract Documents.

14. ADDITIONAL INSTRUCTIONS AND DETAIL DRAWINGS

The Contractor will be furnished additional instructions and detail drawings to carry out the work included in the Contract. The additional drawings and instructions, thus supplied to the Contractor, will coordinate with the Contract Documents and will be so prepared that they can be reasonably interpreted as part thereof. The Contractor shall carry out the work in accordance with the additional detail drawings and instructions.

15. RECORD DRAWINGS

A. The Contractor shall maintain on site one set of contract drawings for the purpose of documenting "record" conditions. Store record drawings separate from documents used for construction. Record information concurrent with construction progress and make available for periodic examination by the Engineer. Ensure that entries are complete and accurate, enabling future reference by the Owner.

B. It shall be the responsibility of the Contractor to legibly mark in red all field changes and conditions as they may occur. A complete file of record field sketches, diagrams and other changes as may become necessary during the progress of work, shall also be maintained and attached to the record drawings.

C. Examples of type of changes which could occur and information that is to be recorded:

1. Change in alignment, slopes, distances, and inverts of sewer pipes.
2. Final location of manholes including final rim and invert elevations.
3. Measured location and elevations of underground utilities and/or relocated utilities installed or encountered during the course of work.
4. Change in location, elevation, dimensions, modifications, additions to structures.
5. Changes in mechanical trades components (electrical, heating, ventilating, plumbing, instrumentation) and measured location of all utilities or trade components concealed from view with references to visible and accessible feature of the structure.
6. Final location and manufacturer information of all equipment.
7. Change in materials, such as pipe material and equipment.
8. Final wiring diagrams of all control panels, electrical panels and equipment panels including conduit sizes and wiring.
9. Final wiring diagrams of all instrumentation including conduit sizes and wiring.
10. Changes in all site improvements including topographical contours of finished grades and paved surfaces, final elevations and locations of all chambers and utilities visible in project area, paving limits, etc.
11. All other items deemed important to provide on record drawings.

D. At completion of the work, the marked up "record" drawings plus all record field sketches and diagrams shall be submitted to the Engineer for his review and use in establishing a basis for final payment.

E. Upon acceptance of the marked up record drawings by the Engineer, the Contractor shall be provided an electronic copy of the contract documents in AutoCAD format so that he may modify the file to correctly show the information of the marked up record drawings. An electronic file of the record drawing on CD and one set of prints shall be provided. Each sheet shall be signed and stamped by a Professional Engineer licensed to practice in New York State and certified as reflecting "record" conditions.

16. REFERENCED TO STANDARDS

A. Whenever reference is made to the furnishing of materials or testing thereof to conform to the standards of any technical society, organization, or body, it shall be construed to mean the latest standard, code, specification, adopted and published at the date of advertisement for bids, even though referenced has been made to an earlier standard.

B. Reference to a technical society, organization, or body may be made in the Specifications by abbreviations in accordance with the following list:

A.C.I.	for American Concrete Institute
A.G.A.	for American Gas Association
A.I.S.C.	for American Institute of Steel Construction
A.S.C.E.	for American Society of Civil Engineers
A.S.T.M.	for American Society of Testing Materials
A.S.M.E.	for American Society of Mechanical Engineers
A.W.S.C.	for American Welding Society Code
A.W.W.A.	for American Water Works Association
C.I.P.R.A.	for Cast Iron Pipe Research Association
Fed. Spec.	for Federal Specifications
A.A.S.H.O.	for the American Association of State Highway Officials
N.E.M.A.	for National Electrical Manufacturers Association
A.W.P.A.	for American Wood Preservers Association
N.B.S.	for National Bureau of Standards
C.R.S.I.	for Concrete Reinforcing Steel Institute
A.N.S.I.	for American National Standards Institute, Inc.
I.E.E.E.	for Institute of Electrical & Electronic Engineers
N.F.P.A.	for National Fire Protection Association
N.E.C.	for National Electrical Code
A.A.M.A.	for Architectural Aluminum Manufacturers Association
S.S.P.C.	for Steel Structures Painting Council
A.G.M.A	for American Gear Manufacturers Association
A.M.C.A.	for Air Moving and Conditioning Association, Inc.
A.S.H.R.A.E.	for American Society of Heating, Refrigerating and Air Conditioning Engineers
E.T.L.	for Electrical Testing Laboratories, Inc.
J.I.C.	for Joint Industry Conference
S.M.A.C.C.N.A.	for Sheetmetal and Air Conditioning Contractors National Association
U.L.	for Underwriters' Laboratories, Inc.
U.S.A.S.I.	for United States of America Standard Institute
OSHA	Occupational Safety & Health Administration
FM	Factory Mutual Association

When no reference is made to a code, standard or specification, the Standard Specifications of the A.S.T.M. shall govern.

C. The Contractor shall, when required, furnish evidence satisfactory to the Engineer that materials and methods are in accordance with such standards where so specified.

17. SHOP DRAWINGS

A. The Contractor shall submit for review by the Engineer shop drawings for all fabricated work, manufactured items, equipment and material required to be furnished in the Contract and as required by the Specifications.

B. Transmit seven (7) copies of each required submittal. Sequentially number each submittal. Resubmittals are to have original number with an alphabetic suffix. Identify Project, Contractor, Subcontractor or Supplier, pertinent drawing sheet and detail number, and specification section number, as appropriate. Schedule the submittals to expedite the Project. Coordinate submission of related items.

C. Apply Contractor's stamp, signed or initialed certifying that review, verification of products required, field dimensions, adjacent construction work, and coordination of information, is in accordance with the requirements of the Project and Contact Documents. Stamp shall show the following information:

1. Shop Submittal Number _____
2. Deviations: None_____ As Listed _____
3. Reference Specification Number _____
4. Reference Drawing Number _____
5. Space Requirements: As Designed _____ As Listed_____
6. Representation is made to the Owner and Engineer that the Contractor has determined and verified all field measurements and quantities, field construction criteria, materials, catalog numbers and similar data, that he has reviewed and coordinated the information in each shop drawing with the requirements of the work and Contract Documents, and hereby approves this submittal.

   Contractor _____

   Signature _____

   Date _____

E. Shop drawing submittals shall include all descriptive data, performance characteristics, material specifications, spare parts list, drawings, piping diagrams, wiring schematics, and shall be complete and accurate to indicate item-by-item compliance with the Contract Documents. All catalog cuts, manufacturer's specifications, drawings, and verbal descriptions shall be clearly marked to allow identification of the specific products used. Catalog cuts showing information for more than one item on the page shall clearly indicate what items the Contractor will be supplying under this Contract by highlighting in an acceptable method to identify the item, dimensions, etc.

F. Equipment manufacturers supplying equipment for the project shall examine the Plans and Specifications pertaining to their particular equipment in order to be fully acquainted with the operating conditions to which the equipment will be subjected.

G. Shop drawings for each major component of a system or subsystem and its appurtenances shall be submitted under separate cover, but all shop drawings for equipment which is part of the same system or subsystem shall be submitted in the form of a package. If requested by the Engineer, the Contractor shall supplement his submittals(s) by such data, as required, to demonstrate that the sizes, capacities, characteristics and/or performances of each component of a system or subsystem, are consistent (compatible) with each other and with the provisions of the technical Specifications, for said system or subsystem.

H. Identify deviations from the Contract Documents and product or system limitations which may be detrimental to the successful performance of the completed work. If the submittal deviates from the requirements of the Specifications in any way, it shall be clearly marked in the submittal with the justifying reason stated for evaluation by the Engineer.

I. If the shop drawing contains any departures from the Contract requirements, request for review thereof shall be made in the Contractor's letter of transmittal. Where such departures require revisions to layouts or structural changes to the work as shown, the Contractor shall, at his own expense, prepare and submit revised layout and structural drawings for review. Such drawings shall be the same size as the Contract Drawings unless otherwise approved. Where a shop drawing is submitted as an "or equal" and the Engineer expends additional cost due to the review of the "or equal" submittal, the Contractor shall be responsible for such increased engineering costs needed to determine if the shop drawing meets the specifications. Such costs may include, but not limited to, research time by the Engineer, visitation to the product manufacturer, performance testing, demonstrations of the product at existing installations, etc. Contractor shall also furnish a listing of existing installations that the proposed substitution may be reviewed, along with contact people at the existing installation. Paragraph 22 of the General Contract Conditions, Substitutions, shall be applicable to any "or equal" substitution.

J. Drawings for electrical equipment shall show physical dimensions and installation details and shall include elementary and connection diagrams for each control assembly and the interconnection diagrams for all equipment. The drawings shall show clearly the coordination of control work, shall identify the components external to electrical equipment, and shall define the contact arrangement and control action of the primary and final control elements.

Where electrical control equipment having internal wiring is required, the detail shop wiring diagrams for such equipment will be required, and will, in general, not be reviewed. The submittal for each item of equipment shall include an elementary diagram of the input and output elements which require connections to external equipment, and a complete step by step description of the control action of the equipment being submitted.

K. Engineer's REVIEW of the Contractor's drawings shall be considered as a gratuitous service, given as assistance to the Contractor in interpreting the requirements of the Contract, and in no way shall it relieve the Contractor of any of his responsibilities under the Contract. The Engineer shall be held blameless and shall accrue no liability for any gratuitous assistance given to the Contractor in interpreting the requirements of the Contract. Any fabrication, erection, setting or other work done in advance of the receipt of shop drawings

returned by the Engineer and noted as "REVIEWED" or "REVIEWED AS NOTED," shall be entirely at the Contractor's risk. The Engineer's review will be confined to general arrangement and compliance with the Contract Drawings and Specifications only and will not be for the purpose of checking dimensions, weights, clearances, fitting, tolerances, interferences, coordination of trades, etc.

L. The review of shop drawings submitted by the Contractor shall not constitute a waiver of any of the requirements of this Contract, nor shall the Owner be compelled to accept any structures, equipment or apparatus unless it passes all the tests and requirements of these Specifications.

M. Contractor agrees that shop drawing submittals processed by the Engineer are not Change Orders; that the purpose of shop drawing submittals by the Contractor is to demonstrate to the Engineer that the Contractor understands the design concept, that he demonstrates his understanding by indicating which equipment and material he intends to furnish and install and by detailing the fabrication and installation methods he intends to use.

N. Contractor agrees that if deviations, discrepancies or conflicts between shop drawings and specifications are discovered either prior to or after shop drawing submittals is processed by the Engineer, the Design Drawings and Specifications shall control and shall be followed.

O. When a shop drawing submittal is satisfactory to the Engineer, the submittal will be stamped "REVIEWED" or "REVISED AS NOTED", be dated, and four (4) copies of the shop drawing will be returned to the Contractor by letter.

P. When a shop drawing is returned to the Contractor "REVISED AS NOTED", the Contractor shall acknowledge in writing to the Engineer that he will provide, as required, all items noted and further that these notations have been properly provided to suppliers, subcontractors, manufacturers associated with the product's shop drawing to assure compliance with the Engineer's review.

Q. When a shop drawing is deemed to be unsatisfactory to the Engineer, he will stamp thereon "REVISED AND RESUBMIT" and will return four (4) copies of the deficient shop drawing to the Contractor with the necessary corrections and changes indicated. The Contractor shall make such corrections and changes as indicated and resubmit seven (7) copies of the revised shop drawing for further review by the Engineer. The Contractor shall revise and resubmit the shop drawing as required by the Engineer, until review thereof is obtained.

R. Should a shop drawing be unacceptable to the Engineer, he will stamp thereon "NOT ACCEPTED" and will return four (4) copies of the deficient shop drawing to the Contractor. It will be the Contractor's responsibility to resubmit a shop drawing that is in compliance with the Contract Documents and that is acceptable to the Engineer.

EQUIPMENT, MATERIALS AND WORKMANSHIP

18. ALL WORK SUBJECT TO CONTROL OF ENGINEER

In the performance of the work, the Contractor shall abide by all orders, directions and requirements of the Engineer and shall perform all work to he satisfaction of the Engineer, and at such times and places, and in such manner and sequence as the Engineer, may require. The Engineer shall determine the amount, quality, acceptability and fitness of all parts of the work. Upon request, the Engineer shall confirm in writing any oral order, direction, requirement or determination.

19. MATERIALS AND WORKMANSHIP

A. The workmanship and materials of all items shall be of the best quality and shall be at all times subject to the observation, direction and general services of the Engineer or such others as he may appoint, who shall each and all have authority and be afforded facilities to visit all parts of the work and who may reject all workmanship and materials which do no conform to the Plans and Specifications, as interpreted by the Engineer. All such condemned work or material or both shall be removed, and those that are proper and acceptable shall immediately be substituted. Materials shall not be delivered so far in advance of their proposed use that they suffer damage.

B. In all cases where material and quality are not definitely specified, samples or specimens shall be submitted to the Engineer for review, except as otherwise specified.

C. The Contractor shall furnish for review, with such promptness as to cause no delay in his own work or in that of any other Contractor, all samples as required by the Specifications. The Engineer shall review such samples, with reasonable promptness, for conformance with the design and for compliance with the information given in the Contract Documents. The work shall be in accordance with reviewed samples.

Should any dispute arise as to the quality or fitness of workmanship, equipment, materials or articles, the decision shall rest with the Engineer, and shall be based upon the requirements of this Contract.

20. SOURCES OF MATERIAL

The Contractor shall, immediately after the award of the Contract, furnish the Engineer in writing the names and addresses of manufacturers or dealers from whom he intends securing his materials. Any material ordered or delivered at the site without approval is subject to rejection without further cause. No awards shall be made by the Contractors and no work under any item shall proceed until satisfactory review of the manufacturer or vendor has bee given by the Engineer.

Such satisfactory review, when given, will be only on the basis of the manufacturer's experience and similar considerations specified herein, and will in no way imply that the

equipment submitted will be satisfactory unless full compliance with the Plans and Specifications is demonstrated by such submitted material, to the Engineer's satisfaction.

21. STANDARD PRODUCTS

All materials, equipment and accessories shall be new and unused and shall be essentially the standard product of a manufacturer regularly engaged in the production of such material or equipment. Such items proposed under these conditions must meet all the technical requirements as stated in the Specifications.

22. MANUFACTURER PERFORMANCE AFFIDAVITS

A. When specified in individual specification Sections, provide a Performance Affidavit for the product or equipment listed.

B. By these affidavits, each manufacturer must certify to the Contractor and the Owner, jointly, that he has examined the Contract Documents and that the equipment, apparatus, process or system he offers to furnish will meet in every way the performance requirements set forth in the Contract Documents. Equipment design, manufacturing and assembly specifications are an integral part of the performance requirements.

C. Shop drawings will not be reviewed prior to the receipt by the Engineer of an acceptable performance affidavit.

D. The performance affidavit must be signed by an officer (vice president or higher) of the basic corporation, partnership, or company manufacturing the equipment, and witnessed by a notary public.

E. The performance affidavit shall be in the following format:

Addressed to:	(Contractor) and (Owner)
Reference:	Contract Name
Text:	(manufacturer's name) has examined the Contract Documents and verifies that the (product) meets in every way the performance requirements and design specifications set forth in Section (s) _____ of the Contract Documents.
Signature:	Corporate officers shall be vice president or higher.
Notary:	Signature (s) must be notarized.

23. SUBSTITUTIONS

Wherever in these Specifications any material or apparatus is designated by its trade name, brand or name of manufacturer, it shall be understood that such material or apparatus is specified as a standard of quality required.

Where such items are specified by dimensions, this shall not be interpreted to preclude the furnishing of such items other than the specified dimensions where the quality, use and serviceability of the material is adjudged the same or the equal of that specified.

If two or more brands, makes of materials, devices, or equipment are shown or specified, each should be regarded as the equal of the other.

Substitutions may be made, but any substitution offered by the Contractor as equivalent shall be subject to the written review of the Engineer, before being ordered. The Contractor shall be responsible for any additional engineering costs that may arise from the Engineer's review of the substitution.

Proposed substitutions shall be subject to the provisions hereinafter specified.

1. The Contractor shall submit for each proposed substitution complete descriptive literature and performance data together with samples of the materials where feasible. Requests for substitutions shall include full information concerning differences in cost, and any savings in cost resulting from such substitutions shall be passed onto the Owner.

2. In all cases the Engineer shall be the sole judge as to whether a proposed product is acceptable and the Contractor shall have the burden of proving the same, at his own cost and expense, to the satisfaction of the Engineer. The Contractor shall abide by the Engineer's decision when proposed substitute items are judged to be unacceptable and shall in such instances furnish the item specified or indicated. No substitute items shall be used in the work without written review of the Engineer. The Contractor shall have and make no claim for an extension of the time or for damages by reason of the time taken by the Engineer in considering a substitution proposed by the Contractor or by reason of the failure of the Engineer to review a substitution proposed by the Contractor.

3. Where the approval of a substitution requires revision or redesign of any part of the work covered by this Contract, all such revision and redesign, and all new drawings and details required therefore shall be subject to the review of the Engineer and shall be provided by the Contractor at his own cost and expense. Any changes in construction work arising out of such revisions and redesign shall be performed and paid for by the Contractor.

4. The substitute equipment will be subjected to a 90 day performance test. The test will begin at the acceptance of the equipment and/or beneficial occupancy of the facility. If the equipment should fail or not perform up to the design standards, the Owner can order its replacement at no additional cost to the Owner. Upon receipt of such a request, the Contractor will immediately replace said equipment with the brand name manufacturer listed in the

specifications. A guarantee attesting to his condition shall be attached to the shop drawing and signed by the Contractor.

24. CONTRACTOR'S TITLE TO MATERIALS

No materials or supplies for the work shall be purchased by the Contractor or by any subcontractor subject to any chattel mortgage or under a conditional sale or other agreement by which an interest is retained by the seller. The Contractor warrants that he has good title to all materials and supplies used by him in the work.

25. CERTIFICATES

All materials or equipment delivered to the site shall be accompanied by certificates, signed by an authorized officer of the manufacturing company, guaranteeing that the materials or equipment conform to specification requirements. Such certificates shall be immediately turned over to the Engineer. Materials or equipment delivered to the site without such certificates will be subject to rejection.

26. NAMEPLATES

Each unit of equipment shall have the manufacturer's name or trademark on a corrosion-resistant nameplate securely affixed in a conspicuous place. The manufacturer's name or trademark may be cast integrally with stamp, or otherwise permanently marked upon the item of equipment. Such other information as the manufacturer may consider necessary to complete identification shall be shown on the nameplate.

27. SAMPLES

Upon written demand of the Engineer, the Contractor shall submit to the Engineer for review, samples of materials he proposes to use. Samples shall be in duplicate, of sufficient size, number or amount to show the quality, type, range of color, finish, and texture of the material he intends to furnish under this Contract.

Each sample shall be labeled bearing the name and quality of the materials the Contractor's name, date and name of the project. A letter from the Contractor requesting review, shall accompany all such samples. Transportation charges to the Engineer must be prepaid on samples forwarded.

Samples shall be submitted in due time so as to permit proper consideration without delaying the Contractor's operation. All materials shall be furnished equal to the reviewed samples. The use of any material will be permitted only so long as its quality remains equal to the reviewed sample, and any material delivered to the site of the work, whether incorporated in the structure or not, which does not conform to he reviewed sample, will be rejected and shall be removed and replaced by acceptable materials at once at the Contractor's expense.

28. INSPECTION

The Engineer is the sole judge if it is necessary that any material or equipment be inspected at the place of manufacture.

General conditions of the Specifications provide for proper inspection and testing of materials. The selection of bureaus, laboratories, and/or agencies for such inspection and testing is subject to the approval of the Engineer. Satisfactory documentary evidence that material has passed the required inspection and testing must be furnished to the Engineer prior to its incorporation in the work, and rejected material must be promptly removed from the premises.

It must be distinctly understood that the inspection and acceptance of materials and work at the mills, shops, or at any place where material or work is in course of preparation, to facilitate the progress of the work, shall not preclude rejection at the site of the proposed work, if the material were found unsuitable.

29. TESTS

The Contractor shall furnish all tests as directed in the Specifications or Contract Documents, or whenever directed to do so by the Engineer. Such tests shall be performed at the Contractor's expense by a reliable testing laboratory approved by the Engineer prior to testing.

The Contractor's selected testing laboratory shall make all required tests on backfill compaction, the materials used in concrete, proportioning of concrete mixes, and tests on concrete as the work progresses. Four (4) copies of all test reports shall be supplied to the Engineer by the laboratory.

The Owner reserves the right to independently perform at its own expense, laboratory tests on random samples of material or performance test on equipment delivered to the site. If made, these tests will be conducted in accordance with the appropriate referenced standards or specification requirements. The entire shipment represented by a given sample, samples or pieces of equipment may be rejected on the basis of the failure of samples or pieces of equipment to meet specified test requirements. All rejected materials or equipment shall be removed form the site, whether stored or installed in the work, and the required replacements shall be made, all at no additional cost to the Owner.

Field tests of materials and equipment installed shall be made by the Contractor, at his own expense, when ordered by the Engineer. Field tests of materials on the job site will be made by the Engineer at his discretion. The Contractor shall furnish at his own expense, the materials required for field tests and reasonable labor to assist the Engineer in conducting the tests.

30. OPERATING TESTS

A. Perform field test of equipment as required in the technical specification sections.

B. Arrange for the equipment manufacturer to furnish the services of a qualified representative. The time period for the supervision and instruction from the manufacturer is stated in the technical specification sections. Where no specific duration of visit is listed, the length of time shall be such to allow the equipment representative ample time to follow the requirements outlined in the individual technical section covering the particular equipment item.

The contractor will be responsible for any additional time required for the manufacturer's representative to resolve equipment installation and/or operation problems due to a lack of coordination between the supplied equipment and the Contract Documents such as, but not limited to, dimensions, electrical problems, controls, or performance.

The manufacturer's representative shall certify installation, recommend or make adjustments and supervise field testing of equipment.

The manufacturer's representative shall provide certification of equipment compliance by submitting a written certification jointly to the Owner, Engineer, and the Contractor that the equipment supplied or manufactured by their organization has been installed and tested to their satisfaction, and that all final adjustments thereto have been made. Certification shall include date of final acceptance field test, as well as, a listing of all persons present during the tests.

C. Contractor shall furnish all labor, material and instruments to perform all preliminary field tests of equipment. Make all necessary changes, adjustments and replacements required to comply with the requirements of the Contract Documents. Preliminary field test shall demonstrate that the equipment is installed in the location and orientation specified in the equipment manual and as specified in the Specifications or Drawings and that the equipment is prepared for operation in strict accordance with the manufacturer's recommendations.

D. Perform final acceptance tests prior to the startup of the equipment or system. Provide services of the manufacturer's representative for the final acceptance test to certify that the equipment has been installed and tested to their satisfaction. Contractor to furnish all labor, equipment, instruments, materials, fuel, lubricants, energy, water, and all other incidentals necessary for the final acceptance tests. Final acceptance tests shall consist of the following checks as a minimum:

1. That the equipment is adjusted, aligned, balanced, lubricated and properly installed.
2. That the equipment meets the specified performance requirements in every detail and performs it's intended function without any unusual vibration, noise or other signs of possible malfunction.
3. Perform motor field tests to verify rotation, voltage, current, motor insulation resistance and other parameters as required.

4. Where equipment is capable of operation in more than one function, each operational mode or function shall be checked for proper performance.
5. All controls, both mechanical and electrical, shall be checked individually for proper connection and operation.
6. All equipment, systems, and controls shall be checked with both utility power source and with backup generation power source.
7. All instrumentation shall be checked for proper functionality.
8. All alarms are verified and properly transmitted through the telemetry system and/or SCADA system.

31. GENERAL ARRANGEMENT

The Contract Drawings indicate the extent and general arrangement of the work. If any departures from the Contract Drawings are deemed necessary by the Contractor to accommodate the materials and equipment he proposes to furnish, details of such departures and reasons therefore shall be submitted as soon as practicable to the Engineer for approval. No such departures shall be made except as provided for in Articles 23 and 83 of the General Contract Conditions.

32. SPARE PARTS DATA

Following review of the list of equipment, the Contractor shall furnish spare parts data for each different items of equipment listed. The data shall include a complete list of parts and supplies which may be subject to breakdown, with current unit prices and source of supply; a list of parts and supplies that are either normally furnished at no extra cost with the purchase of the equipment and a list of additional items recommended by the manufacturer to assure efficient operation for a period of 120 days at the particular installation. The foregoing shall not relieve the Contractor of any responsibilities under any guaranty specified herein. The above shall be submitted with the Operation and Maintenance Manual submission for the equipment.

33. TOOLS AND ACCESSORIES

The Contractor shall, unless otherwise stated, furnish with each type, kind or size of equipment, one complete set of suitably marked high-grade special tools and appliances which may be needed to adjust, operate, maintain or repair the equipment. Such special tools and appliances shall be furnished in approved painted steel cases properly labeled and equipped with good grade cylinder locks and duplicate keys. All locks to be keyed to Owner's existing equipment.

Each piece of equipment shall be provided with a substantial name plate, securely fastened in place and clearly inscribed with the manufacturer's name, year of manufacturer, and principal rating data.

34. OPERATING AND MAINTENANCE MANUALS

A. Contractor shall submit operation and maintenance manuals as required by the applicable technical sections of the Contract Documents. Submit four (4) hardcopies and one (1) electronic version of the manuals for use by the Owner. All manuals shall be bound into a series of identical heavy duty three-ring binders. Electronic files shall be .pdf format submitted on compact disk.

B. Each manual shall have a title page indicating the full name of the Project, the location, the Owner, Contract Designation under which the equipment or system was provided, and the name, address and telephone number of the local representative for each piece of equipment, as well as home office information. This sheet shall also contain any necessary identifying information required for repair service.

An index should follow the title sheet and contain each section or separate title contained in the Manual. Drawings are to be listed by title and drawing number. Pages should be consecutively numbered.

A copy of the guarantee from the product manufacturer is to be provided if standard manufacturer's guarantee is required. The guarantee section shall also contain information on applying for assistance under the guarantee. Guarantee shall be signed and in effect.

C. Information shall be organized by section, each section covering a specific equipment item. Section shall be listed in a Table of Contents at the front of each volume. Each section shall contain as a minimum:

1. Section Table of Contents.
2. Descriptive data including catalog cuts, technical bulletins, diagrams, drawings, charts, pump curves, wiring diagrams, and all other pertinent information describing the location, operation, maintenance, lubrication and other information necessary for the Owner to establish an effective operating and maintenance program.
3. Complete parts list that includes all component parts and parts diagrams for all equipment showing manufacturer's identification numbers for each part.
4. Copies of approved shop drawings, where required, to adequately describe interrelation of components within a system.
5. Complete electrical and control schematics with labeled terminations and all field changes.
6. List of special tools required for operation and maintenance.
7. List of spare parts supplied with the equipment, identified by manufacturer's part numbers.
8. Source of replacement parts and address and telephone number of the manufacturer's service representative.

D. At the end of each section, the Contractor shall include detailed maintenance and lubrication schedule for all equipment covered in the section. Schedule shall include the following, as a minimum, for each equipment item:

1. List and frequency of maintenance activities, other than lubrication.
2. Lubrication frequency and application points.
3. Lubricant type (weight of grade and recommended manufacturer) and method of application.

E. Completed manuals shall be submitted to the Engineer for review and acceptance. Incomplete or inadequate manuals will be returned to the Contractor for correction and resubmission. Manuals must be in acceptable form prior to full payment of the item or equipment.

35. EQUIPMENT INSTALLATION

The Contractor shall have on hand sufficient proper tools and machinery of ample capacity to facilitate the work and to handle all emergencies normally encountered in work of this character. Install all equipment strictly in accordance with the recommendations of the manufacturer.

Equipment shall be erected in a neat and workmanlike manner on the foundations at the locations and elevations shown on the Plans unless directed otherwise by the Engineer during installation. All equipment shall be correctly aligned, leveled and adjusted for satisfactory operation and shall be installed so that proper and necessary corrections can be made readily between the various units.

The Contractor shall furnish, install and protect all necessary guides, track rails, bearing plates, anchor and attachment bolts and all other appurtenances needed for the installation of the devices included in the equipment specified. Anchor bolts shall be made of ample size and strength for the purpose intended. Anchor bolts in submerged locations shall be of non-corrosive materials of the required strength.

The Contractor shall furnish all oils and greases for initial operation, and shall give to the Engineer a list of the lubricants used on each item of equipment. Insofar as possible, all lubricants shall be obtained from one manufacturer, approved by the Owner. Each item of equipment shall be tagged to show the date and the name and type of lubricant used.

36. ADDITIONAL ENGINEERING SERVICES

A. In the event that the Engineer is required to (1) provide additional engineering services as a result of substitution of materials or equipment by the Contractor, or changes by the Contractor in dimension, weight, power requirements, etc., of the equipment and accessories furnished; (2) examine and evaluate any changes proposed by the Contractor for the convenience of the Contractor; (3) provide additional engineering services as a result of Contractor's errors, omissions or failure to conform to the requirements of the Contract Documents; (4) provide additional engineering services including resident observation and inspections for any period the Contractor extends his work beyond the time of completion as stated in Article III(b) on page C-2 of the Specifications, due to the fault of the Contractor for not meeting his approved construction schedule, then the Engineer's expenses in connection with such additional services shall be paid by the Contractor to the Owner who shall reimburse the Engineer.

B. The "Engineer's Expenses" shall be computed based on the current rate schedules of the Engineer plus out-of-pocket expenditure as detailed in the agreement for engineering services between the Engineer and Owner.

SITE CONDITIONS

37. SITE INVESTIGATION

The Contractor acknowledges that he has satisfied himself as to the nature and location of the work, the general and local conditions, particularly those bearing upon transportation, disposal, handling and storage of materials, availability of labor, water, electric power, roads and uncertainties involving weather, ground water table or similar physical conditions at the site, the formation and condition of the ground, the character quality and quantity of surface and subsurface materials to be encountered, the character of equipment and facilities needed prior to and during the prosecution of the work and all other matters which can in any way affect the work or the cost thereof under this Contract. Any failure by the Contractor to acquaint himself with all the available information concerning these conditions will not relieve him from responsibility for estimating properly the difficulty or cost of successfully performing the work.

38. BORINGS

The Contractor shall perform such borings, soundings, test pit excavations seismic and geotechnical investigations as may be required to inform himself as to surface and subsurface water conditions, rock and other materials which may be encountered, prior to submitting a bid. The Contractor acknowledges that he assumes all risk contingent upon the nature of the subsurface conditions to be actually encountered by him in performing the work covered by the contract, even though such actual conditions may be of an unusual nature, differing materially from those ordinarily encountered or may result in the Contractor performing more or less work than he originally anticipated.

The logs of any available soundings, borings, rock cores, and other subsurface data, if secured in behalf of the Owner, are, for the convenience of the Contractor, included in the

Specifications. Such data (1) are made available in good faith solely for the purpose of supplementing the Contractor's own investigation, (2) have been utilized for general design purposes only and may not be indicative of all subsurface conditions that may be encountered, (3) may be inadequate for purpose of preparing a bid, (4) the data may not be accurate or complete, (5) the provided information may not be complete and that an independent soil and site investigation should be completed by the Contractor prior to bidding and (6) are in no event to be contractual considered a part of the Contract Documents. Examination of the soil samples may be made by making a request of the Engineer. The making available of these subsurface data to Bidders is not intended to relieve them from their responsibility to familiarize themselves with the subsurface conditions in accordance with the requirements of Article 5, Section A of the Instructions to Bidders. The boring logs, soil samples and other subsurface information will not be interpreted by the Owner or the Engineer, or the boring contractor. The Contractor's interpretation of such data will be solely according to his own judgement and he acknowledges that he is not to rely upon the same as accurately describing the subsurface conditions which may be found to exist. It is strongly recommended the contractor complete a pre-bid site inspection to verify subsurface conditions and the available information.

39. SUBSURFACE CONDITONS FOUND DIFFERENT

Should the Contractor encounter subsurface and/or latent conditions at the site materially differing from those shown on the Plans and indicated in the Specifications, he shall immediately give written notice to the Engineer of such conditions and, before they are disturbed, the Engineer shall promptly investigate the conditions and if he finds that a change in design and/or specifications is necessary and such change is implemented, any increase or decrease of cost resulting from such changes are to be adjusted in the manner provided herein for adjustments as to extra and/or additional work and changes.

The provisions of this Section are not to be construed as an indication that, where rock excavation is not a pay item but is included in the unit bid prices for pipe and structures, there would be additional payment for rock excavation because of subsoil conditions found to be different. Where the unit bid prices for pipe and structures include the cost of rock excavation, there will be no deduction in payments or additional payments to the Contractor for rock levels found to vary from the depths indicated or implied.

Excluded from consideration under this item is rubble, masonary, rock, etc. under 1 cubic yard in size which is excavated by conventional means.

40. SURVEY

All work under this contract shall be constructed in accordance with the lines and grades shown on the Plans or as given by the Engineer. The Engineer will establish bench marks, base lines, and other principal controlling points and set grade stakes every 100 feet of improvements and at manholes (once only). The Contractor shall check such lines and grades by such means as he may deem necessary and before using them shall call the Engineer's attention to any inaccuracies.

The Contractor shall furnish and maintain, at his own expense, stakes, batter boards, etc., and give assistance including qualified helpers, as shall may be required by the Engineer for setting and checking line and grade. The stakes shall be of hardwood, dry and 2 inch x 2 inch x 24 inch long with pointed end. The lath shall be hardwood ½ inch x 2 inch x 4 feet long with pointed end. Materials to be used by the Engineer shall be delivered to the site of the work, where stakeout is required.

The Contractor will be responsible to provide the Owner weekly progress reports reflecting as-built conditions (including manhole stations, off set and invert elevations) for the work completed. The field checks shall be performed by a Licensed Surveyor or a Professional Engineer and the reports shall contain his original signature and stamp. The reports shall be submitted to the project engineer prior to the start of the following week's construction.

The Contractor shall provide, for use by the Engineer and/or Owner's representative, for the duration of the project a surveying level with minimum accuracy of 0.1 distance in miles and a level rod of sufficient length to obtain invert elevations for each section of proposed sewer pipe laid. All equipment shall be subject to the Engineer's review. Prior to acceptance of said equipment by the Engineer, all equipment shall be calibrated and certified, by a qualified survey equipment firm, that said equipment is in first class condition. The Contractor shall also provide the use of one man to assist in obtaining all elevations when needed.

41. REQUEST FOR SURVEYS FOR LINES AND GRADES

The Contractor shall keep the Engineer informed, a reasonable time in advance, of the times and places at which he intends to work, in order that line and grades may be furnished and necessary measurements for record and payment may be made with the minimum of inconvenience to the Engineer or delay to the Contractor. It is the intention not to delay the work for giving lines and grades, but when necessary, working operations shall be suspended for such reasonable time as the Engineer may require for his purpose. All clearing and grubbing necessary for construction stake-out is the responsibility of the Contractor.

42. PRESERVATION OF STAKES, MONUMENTS, ETC.

The Contractor shall be held responsible for the preservation of all stakes, property lines, corners, control points, and, if in the opinion of the Engineer, any items mentioned above have been destroyed or disturbed, the cost to the Engineer of replacing them shall be charged against the Contractor at the Engineer's current rate for this type of work. Payment for the above work shall be made directly to the owner who shall reimburse the Engineer.

43. DATUM OF PLANS

All land, surface and water elevations refer to the datum specified on the Construction Drawings. Bench marks will be established by the Engineer.

44. PROJECT PHOTOGRAPHS

A. The Contractor shall engage and pay for the services of a professional photographer to make photographs prior to moving on site and bi-weekly thereafter at the locations and at such stages of construction as directed by the Engineer. Upon completion of the project, a minimum of four views shall be taken as directed by the Engineer to indicate the general extent of the developed site.

B. The Contractor is responsible to take a sufficient number of preconstruction photographs so as to resolve any disputes which may arise regarding the conditions prior to and subsequent to construction. Photographs shall be submitted to Engineer for approval prior to construction work. Should Engineer deem the number, type and quality of the photographs are insufficient to properly reflect existing conditions, the Contractor shall re-take photographs until Engineer's approval is received. If a dispute arises where no preconstruction photographs were taken, the disputed area shall be restored to the extent directed by the Engineer and to the complete satisfaction of the Engineer. The Engineer may, at his option, take additional preconstruction photographs which may be used to settle disputes, but he will not be required to make these photographs available to the Contractor. Preconstruction photographs taken by the Contractor will not be considered as part of the required number of construction photographs required.

C. During the project work, photographic documentation is required for all major work activities on a bi-weekly basis or at such intervals as necessary to provide complete documentation. The progress photographs shall be taken at times spaced, as appropriate, over each activity period to provide views representative of the entire project work. A minimum of six (6) exposures per session shall be taken.

The Contractor shall provide two (2) color prints of each photograph. Photographs shall be 8x10 inches in size, and should have the following information typed on the back:

A. Title of Project, Project Number (Consecutive)
B. Date
C. Location (by description or station)
D. Description of Photograph
E. Contractor's Name
F. Name and Address of Photographer

The prints and other information, as directed, shall be delivered to the Engineer as soon as they have been processed. Each photograph shall be numbered in sequence. Each photograph shall be cross referenced with a map showing the photograph number and directed arrow of the shot.

45. AREA TO BE OCCUPIED BY THE CONTRACTOR

The proposed work is located on the Owner's property, within highway right-of-ways, and/or within easements obtained by the Owner. The Contractor shall confine his work within these areas. Should the Contractor occupy land outside these boundaries, it shall be at his own risk and expense.

The required easements obtained for the Project are shown on the Plans. The Contractor shall be responsible for providing, at his expense, any special easement conditions that are contained in the easements as noted in these Contract Documents. Where, within the limits of the easement, trees are required to be cut, the Contractor shall offer the resulting firewood or timber to the property owner on whose land the trees have been felled and provide proof of such offer.

Should there be an easement that the Owner is in the process of obtaining; the Contract Documents will indicate as such. No work shall commence in these areas until the easement acquisition has been completed. No additional payment will be made to the Contractor for any delay in acquisition of the easement by the Owner. Delays will be considered as an extension to the date of completion if requested by the Contractor in writing.

46. PROTECTION OF PROPERTY

A. The Contractor shall be responsible for the preservation and protection of property adjacent to the work site against damage or injury as a result of his operations under this Contract.

If it is necessary to remove any structures due to the requirements of the work, the structures removed shall be replaced so that they are equal to the original condition. The Contractor shall assume full responsibility for any damage done and shall save the Owner harmless in all respects. Adequate insurance, approved by the Owner, shall be carried by the Contractor to cover his responsibility.

Public utilities shall be protected and service maintained. If it is necessary to move any utilities, arrangements will be made by the Contractor with the utility company for said work. Permanent support for all trench crossings of exiting utilities shall be provided and shall meet with the approval of the Owner or utility company concerned.

Any damage to gas mains, gas service, water mains, water services, cross drains, culverts, sewage disposal systems, electric, guard rails, etc., shall be repaired or replaced at the Contractor's expense.

The Contractor shall include in the unit and lump sum prices bid under this contract, the cost of relocating existing utilities (above and below ground) such as sewer and water pipe lines, power poles, gas lines, etc. In cases where the utility company is required by law to relocate their own services, the Contractor shall obtain and include in his bid proposal, the

utility company's cost for protection and/or relocation. It is recommended the Contractor review Division 1, Description of Bid Items, to determine the proper method to apply his costs.

B. The Contractor shall protect trees, shrubbery and other natural features or structures from being cut, trimmed or injured, unless ordered by the Engineer for clearing the site of the work. He shall prevent employees from tramping in shrubbery and vehicles from being driven through wooded lands. He shall protect trees adjacent to the work with plank walls, if necessary.

The Contractor shall provide and replant at his own expense, trees, lawns, shrubbery and other natural features destroyed or damaged. He shall conduct his operations within such limits as the Engineer directs.

C. It is the Contractor's responsibility to make himself aware of, and comply with, such safety regulations as may be required by jurisdictional agencies and shall at all times conduct his operations so as to a avoid and eliminate any unsafe conditions created by his operations.

D. Where property owners express the desire to obtain timber or firewood resulting from the cutting of trees located within the limits of easements, the Contractor shall stockpile such time or firewood, in areas designated by the property owners, adjacent to the work site. Timber, firewood and brush not claimed by property owners shall be removed by the Contractor and disposed of, off the site of the work, in the manner acceptable to the Engineer.

E. In the event of any claims for damage or alleged damage to private property as a result of work under this Contract, the contractor shall hold the owner harmless and shall be responsible for all costs in connection wit the settlement of, or defense against, such claims. Prior to commencement of work in the vicinity of private property the Contractor at his own expense shall take such surveys as may be necessary to establish the existing condition of the property. Before final payment can be made, the Contractor shall furnish satisfactory evidence that all claims for damage have been legally settled or sufficient funds to cover such claims have been placed in escrow, or that an adequate bond to cover such claims has been obtained.

The Contractor agrees to comply with Industrial Code Rule 53 of the State of New York Department of Labor, relating to "Construction, Excavation and Demolition Operations at or near Underground Facilities."

F. Where, in the opinion of the engineer, relocation or replacement of utilities not shown on the drawings but encountered within the trench pay width is required for construction of the project, additional payment will be made as described below:

1. Additional payment will not be made for the relocation or replacement of sewer, water, gas, telephone, TV cable and power connections to buildings. Such service connections, though not shown on the Drawings, are an intrinsic part of the work along developed streets and their protection and relocation shall be included in the various unit bid prices.

2. Additional payment for relocation or replacement of utilities not shown on the Drawings and Documents shall only be made where, in the opinion of the Engineer, such relocation or replacement is not avoidable and is required for the construction of the project. Additional payment for relocation or replacement of utilities not shown on the Drawings and Documents will not be approved where, in the opinion of the Engineer, the proposed relocation or replacement is solely for the purpose of facilitating the Contractor's operations.

3. Limits for additional payment for relocation of utilities not shown on the Plans shall be the actual length located within the trench pay width plus two (2) feet either side, to allow for connections that have to be made outside the trench pay width.

4. Amount of additional payment for relocation or replacement of utilities not shown on the drawings shall be as follows:

a. Where work is done by a utility company, payment shall be for the actual reimbursement by the Contractor to the utility company for work within limits described in Section 3 above. No Contractor's overhead, profit, and/or other incidentals will be allowed to be added to the utility company's invoice for services.

b. Where work is done by the Contractor, payment shall be for excavation, pipe, concrete, reinforcement, steel sheet piling, at stipulate unit prices for Contingency Items, plus invoice cost of valves, pipe, cables, ducts and other appurtenances incorporated in the work for which there are no Contingent Items, and select material backfill and pavement replacement at unit bid prices, all within limits described in Section 3 above.

c. Except for the payments listed above, there will be no other additional payments for costs incurred for the relocation or replacement of utilities that are not shown on the Drawings, but, in the opinion of the Engineer, are required to be relocated or replaced. The cost of delays, the cost of pumping to lower ground water levels, and other similar expenses incurred are to be included in the bid prices in the proposal.

47. EXISTING STRUCTURES AND UTILITIES

A. The Contract Drawings show information regarding the location of existing utilities. This information is secured from existing records and field data, from reliable sources, but is not guaranteed to be entirely accurate or complete. The Contractor shall inform himself regarding the conditions. No extra payment will be allowed to the Contractor for variation in locations of structures or conditions not shown, except as outlined in Division 1, Description of Bid Items.

B. It will be necessary for the Contractor to locate all water services, gas services, water mains, gas mains, cross drains, culverts, sewers, sewer laterals, electric conduits, etc., as to depth and alignment in advance of laying. The Contractor shall excavate and uncover all underground utilities and structures to be crossed or paralleled by the proposed work a sufficient time in advance of construction to permit a change in line and grade of the proposed work if the

location of the existing utility or structure should interfere with the proposed work. Where, in the opinion of the Engineer, a change in the line and grade is not practicable, interfering utilities shall be relocated.

C. Where it is necessary to install the sewer pipe lines close to water lines or between other pipe lines for short distances, the Contractor shall shore, block and protect the other mains to the satisfaction of the utility agency or municipality having ownership or jurisdiction over said pipe lines.

D. Whenever existing utilities or other underground facilities are encountered which obstruct the line or grade of the proposed pipeline, thereafter the Contractor shall notify the Engineer, and he shall make such revisions to the construction plans as may be necessary and as ordered by the Engineer, to remedy the situation. An extension of time will be allowed in proportion to the delay incurred. The Contractor shall proceed in accordance with the revised written instructions of the Engineers. A reasonable interval of time shall be allowed the Engineers for preparing such revisions. NO additional payment will be made to the Contractor for any delay resulting from preparing such revisions.

E. Access to various municipal structures shall not be obstructed by the Contractor to prohibit use of hydrants, valves, manholes, fire alarms, etc. The Contractor is to make no connections to existing water mains, or operate valves on existing mains, or otherwise interfere with the operation of the existing water distribution system, without first giving twenty-four (24) hours notice to the Owner, and securing his approval of the proposed action.

If it becomes necessary to shut off the water service, consumers so affected shall be notified at least three (3) hours before by the Contractor, and in the case of industry, provide reasonable notice considering his requirements.

48. SUPERVISION-COMPETENT WORKERS

The Contractor shall give the work his personal attention. He shall keep on the work site at all times, from the start to the final acceptance of the work, a superintendent who, in the absence of the Contractor, shall have full authority from the Contractor to execute these orders without delay and to supply materials, equipment and labor. The on-site superintendent shall be fully aware of all health and safety regulations and OSHA Standards. The superintendent shall coordinate the activities of the Contractor's employees and subcontractor to ensure proper safety measures are being followed during the construction of improvements.

The superintendent shall not be changed except with the consent of the Engineer, unless the superintendent proves to be unsatisfactory to the Contractor. The superintendent shall represent the Contractor in his absence and all directions given to him verbally or otherwise, shall be as binding as if given to the Contractor. Important verbal directions will be confirmed in writing by the Engineer to the Contractor. Other verbal directions will be so confirmed on written request of the Contractor. The Contractor shall give efficient supervision to the work using his best skill and attention. The Engineer shall not be responsible for the acts or omissions of the superintendent or his assistants.

The Contractor shall employ only competent and efficient workmen and first class mechanics or artisans for every kind of work. Whenever, in the opinion of the Engineer, any man is unfit to perform his task, or does his work contrary to directions, or conducts himself improperly, the Contractor must remove him immediately from the project upon the Engineer's written request.

49. ENGINEER'S OBSERVERS

Duly authorized observers who shall perform their duties under the direction of the Engineer will be assigned to the work or each part thereof.

No Contractor shall refuse to allow representatives of the County Agencies, State Agencies, Federal Agencies, and other Agencies having jurisdiction over portions of the work, to gain access to the project and to make such inspections as are required.

A. All material and workmanship shall be subject to review, examination and testing by the Engineer, and other representatives of the Owner, at any and all such times during manufacture and/or construction, and at any and all places where such manufacture and/or construction are carried on.

B. The Contractor shall execute his work in the presence of an Observer and during the working hours of the day unless specifically directed otherwise, and shall afford every facility for observing and reviewing the materials and work at all times. The presence of the Observer shall in no way lessen the responsibility of the Contractor. In case any dispute arises between the Contractor and the Observer as to materials furnished or the manner of performing the work, the Observer shall have authority to reject materials or suspend the work until the question at issue can be referred to and decided by the Engineer. The Observer is not authorized to revoke, alter, enlarge, relax, or release any requirements of these Contract Documents, not to approve or accept any portion of the work, nor to issue instructions contrary to the Drawings and Specifications.

C. The Contractor shall keep a job diary listing the activities performed, the personnel on the job site and any other noteworthy items. Such diary shall be available for the review of the Owner or the Engineer.

D. If the Specifications, the Engineer's instructions, laws, ordinances, or any public authority requires any work to be specially tested or reviewed, the Contractor shall give the Engineer timely notice of its readiness for review; and if the review is by an authority other than the Engineer, of the date fixed for such review. If any work should be covered up without approval of consent of the Engineer, it shall, if required by the Engineer, be uncovered for examination and properly re-stored at the Contractor's expense.

E. At any time during the progress of the work, and up to the date of final acceptance, the Engineer shall have the right to reject any work which does not conform to the requirements of the Contract Documents, even though such work has been previously reviewed and paid for. Any omissions or failure on the part of the Engineer to reject any work or materials

at the time of review, shall not be construed as an acceptance of any defective work or materials. If any work or materials shall be condemned by the Engineer as defective, or improperly done, such work shall be removed and replaced or the defects otherwise remedied in a manner satisfactory to the Engineer, and consistent with the intent of the Contract, at the expense of the Contractor.

50. STORAGE AND HANDLING OF MATERIALS

A. The Contractor shall store his equipment and materials at the job site in a manner acceptable to the Owner or Engineer, and in conformity to applicable statutes, ordinances, regulations and rulings of proper public authority. He shall not store unnecessary materials or equipment on the job site. He shall enforce the instructions of the Owner and the Engineer respecting signs, advertisements, fire and smoking.

B. The Contractor shall store his apparatus, materials, supplies, and equipment in such orderly fashion at the site of the work as will not unduly interfere with the progress of his work or the work of any other contractors.

C. The Contractor shall place upon the work of any part thereof only such loads as are consistent with the safety of that portion of work.

D. Materials stored upon streets or roads shall be so placed as to cause minimum obstruction to traffic and to the public. Materials stored upon streets or roads are subject to the approval of the agency having jurisdiction of the highway. Materials shall not be placed within 10 feet of fire hydrants. Gutters and drainage inlets shall be kept unobstructed at all times. The Contractor shall not store materials or encroach upon private property without the written consent of the owners of such private property.

51. PROTECTION OF WORK AND MATERIALS

During the progress of the work, and up to the date of final acceptance, the Contractor shall bear all risk of loss and shall be solely responsible for the care and protection of all work and materials covered by this Contract.

All work and materials shall be protected against damage, injury or loss from any cause whatsoever and the Contractor shall make good any such damage or loss at his own expense before final payment is made.

52. PROTECTION OF TRAFFIC

A. The Contractor shall inconvenient traffic as little as possible and shall provide suitable barricades, red lights, "danger" or "caution" signs at all placed where the work constitutes in any way a hazard to the public. All barricades and obstructions along public roads shall be illuminated at night and all lights for this purpose shall be kept burning from sunset to sunrise.

B. In addition, the Contractor shall provide and maintain such other warning signs and barricades in other areas as may be required for the safety of those employed in the work or visiting the site.

C. The Contractor shall provide watchmen at particularly dangerous locations such as railroads, heavily traveled roadways and similar locations, and where ordered by the Owner.

D. Access to private properties over driveways shall be maintained. Temporary structures erected by the Contractor to accomplish this shall be safe. The Contractor shall be liable for any damage ordinary resulting from the work.

E. Arrangements for traffic protection and control, detours, barricades, danger signs and warning lights shall be provided in accordance with local jurisdictional authorities' requirements and the Manual of Uniform Traffic Control Devices by New York State Department of Transportation.

53. TRAFFIC CONTROL

A. The Contractor shall maintain vehicular and pedestrian traffic and protect the public from damage to person and property, within the limits of the project, for the duration of the contract.

B. The Contractor is placed on notice that the maintenance and protection of traffic and protection of the public during construction is considered as important and as necessary of an item of work as is the actual construction itself. All work under this bid item shall be performed in accordance with the New York State Department of Transportation Standard Specification, latest revision. The Contractor shall protect the user from damage to person and property which may result directly or indirectly from a construction operation. The New York State Department of Transportation Specifications requirements of Section 107 "Legal Relations and Responsibility to Public" shall apply.

C. All existing roads, streets, sidewalks, and traffic ways shall be kept open for the passage of traffic and pedestrians during the construction period unless otherwise approved by the Owner, Engineer, or authority having jurisdiction over same.

D. When required to cross, obstruct or temporarily close an existing site road, street, sidewalk or traffic way, Contractor shall provide and maintain suitable detours or other approved temporary expedients for the accommodation of traffic. Closings shall be for the shortest time practical and passage will be restored immediately after the completion of backfill and temporary paving or bridging. Stopping traffic for more than five minutes shall not be permitted unless specifically authorized in writing from the authority having jurisdiction.

E. Contractor shall give 48 hour notice to the fire and police departments, and school districts of his proposed operations including shutdowns.

F. Contractor shall provide, install, move, remove and maintain all signs, signals, barricades, flares, lights and all other equipment, service and personnel required to regulate and protect all traffic, and warn of hazards. All such work shall conform to the requirements of the owner or authority having jurisdiction. Remove temporary equipment and facilities when no longer needed.

G. Traffic shall be maintained over a reasonably smooth traveled way which shall be so marked by signs, delineators and/or other methods so that any person unfamiliar with conditions is able to safely ride, drive or walk day or night with a minimum of discomfort and inconvenience over all or any portion of the street under construction where traffic is to maintained. All work shall conform to the New York State Manual of Uniform Traffic Control Devices.

H. Contractor will be responsible to prepare maintenance and protection of traffic plan with the applicable Erie County Highway Department, NYS DOT and the local Highway Department for approval. The maintenance and protection of traffic plan shall be prepared by an engineer licensed to practice in New York State.

I. Contractor shall provide the necessary traffic control equipment and flagmen for adequate traffic control where traffic is restricted to one (1) lane or where other conditions require or as required by permit conditions.

J. Contractor shall provide ingress and egress to and from intersecting streets, homes, businesses and commercial establishments including any temporary pavement. Contractor shall maintain existing bus stops, if any, so passengers are reasonably accommodated.

K. Contractor shall provide temporary markings in accordance with the New York State Manual of Uniform Traffic Control Devices, as required by the agency having jurisdiction, as shown on the plans and specifications and/or as ordered by the Engineer.

L. Contractor shall control dust and keep traveled way free from materials spilled from hauling equipment. Consult with governing authorities to establish thoroughfares which will be used for haul routes and access. Provide traffic control of haul routes to expedite traffic and to minimize interference with normal traffic.

M. Contractor must provide access to all school buses and emergency vehicles including ambulances, police cars, fire equipment, etc. traveling through or stopping at any part of construction site and will yield, at his expense, to these vehicles and cease construction activities, as necessary.

N. The Engineer and Owner shall assume no responsibility for any of the work performed by the Contractor.

54. WORK ALONG HIGHWAYS, RAILROADS, WATERWAYS, AIRPORTS, ETC.

Work along and under roads, railroads, waterways, airports, etc., shall be made in accordance with the Plans and Specifications, and in compliance with permits for the work issued by the Agency of jurisdiction, (see Paragraph 67) which permits the Contractor shall secure and pay for. The cost of any temporary structures or facilities required by the agency having jurisdiction, shall be paid for by the Contractor. The cost of all additional insurance, etc., required by the permit shall be provided by the Contractor.

Any special backfill required and pavement replacement shall be paid under the appropriate bid items, unless otherwise indicated. All other work, materials and equipment shall be included in the construction prices, and no extra will be allowed for such construction. The Contractor shall determine the general requirements of permits of controlling agencies prior to submitted a bid.

The costs of flagging, protective personnel and engineering inspection provided by a railroad, airport, highway department, etc., shall be reimbursed by the Contractor. Costs arising from damage arising form the Contractor's work shall be reimbursed by the Contractor.

55. HOURS OF WORK

It is proposed that the work shall progress on the project every work day during the week, and continuously week by week, until the job is complete, except for holidays, and such days as weather or working conditions make work impractical in the opinion of the Engineer.

Night work after 6:00 p.m. and earlier than 7:00 a.m. shall not be performed without the consent of the Engineer. Failure to abide by the stated times will deem all completed work to be "unacceptable" and not eligible for payment.

56. INCLEMENT WEATHER

Work that would be subject to damage shall be stopped during inclement, stormy or freezing weather. Only such work as will not suffer injury to workmanship or materials will be permitted. The Contractor shall carefully protect his work against damage or injury from the weather, and when work is permitted to proceed during freezing weather, he shall provide and maintain approved facilities for heating the materials and for protecting the finished work.

If, in the opinion of the Engineer, any work or materials that are damaged or injured, by reason of failure on the part of the Contractor or any of his subcontractors to protect his work, such materials shall be removed and replaced at the expense of the Contractor.

57. DUST HAZARD

If, in carrying out this Contract, a harmful dust hazard is created for which appliances or methods for the elimination of harmful dust to have been approved by the Board of Standards and Appeals, then the Contractor agrees to install, maintain and effectively operate such

appliances and methods during the life of this Contract; and in case of failure of compliance of the Contractor as provided by Section 222a of the Labor Law, its Contract shall be void.

When directed by the Engineer, the contractor shall sprinkle water where directed and in such quantities and at such frequencies as may be required to control such dust and prevent it from becoming a nuisance to the surrounding area at no additional cost to the Owner. All roads must be maintained dust free at all times. Daily cleaning will be required. Any damage caused by dust from the Contractor's operation shall be remedied at his expense.

The use of any petroleum products or the use of calcium chloride for dust control is strictly prohibited.

58. ACCIDENT PREVENTION

Precaution shall be exercised at all times for the protection of persons (including employees) and property, and hazardous conditions shall be guarded against or eliminated.

The Contractor shall provide at the site, such equipment and medical facilities as are necessary to supply First-Aid Service to any of his personnel who may be injured in connection with the work. The Contractor shall promptly report in writing to the Engineer all accidents whatsoever arising out of, or in connection with, the performance of the work, whether on or adjacent to the site, which caused death, personal injury or property damage, giving full details and statements of witnesses. In addition, if death or serious injuries or serious damages are caused, the accident shall be reported immediately by telephone or messenger to both the Engineer and the Owner. If any claim is made by anyone against the contractor or a subcontractor on account of any accidents, the Contractor shall promptly report the facts in writing to the Engineer, giving full details of the claim.

59. TEMPORARY LIGHT AND POWER

Unless stated otherwise in the Contract Documents, where there is more than one Contractor on a project involving structures or buildings, it shall be the obligation and responsibility of each Prime Contractor to provide and maintain temporary facilities for furnishing light and power necessary for operations under their own Contract, and to make all necessary arrangements therefore, including all required connections, ordering the meter, and paying all fees and inspection charges. Removal of temporary facilities shall be by each Prime Contractor. The installation and meters shall remain until completion of the Project.

If, in the opinion of the Engineer, the facilities provided are inadequate, the Prime Contractors will not be permitted to proceed with any portion of the work affected thereby.

All wiring for electrical light and power shall be installed and maintained in a first class manner, as ordered or approved, and at all points securely fastened in place. Unless otherwise permitted, circuits separate from lighting circuits shall be used for all power purposes. Temporary electric shall be in conformance with the National Electrical Code.

60. TEMPOARY WATER SERVICE

Unless stated otherwise in the Contract Documents, where there is more than one Contractor on a project, involving structures and buildings, it shall be the obligation and responsibility of each Prime Contractor to provide and maintain the temporary water service on the site of work suitable for all operations under their own Contract, and to make all necessary arrangements and payments therefore.

Removal of temporary facilities shall be the responsibility of each Prime Contractor. The installation and meters shall remain until need for same by each Contractor has ceased, or until completion of the Project.

The Prime Contractor for each Contract shall provide, at his own expense, the water supply necessary for drinking purposes.

61. TEMPORARY HEATING

Unless stated otherwise in the Contract Documents, where there is more than one Contractor on a project, each Prime Contractor shall provide temporary heat as required when work under their own contract is being carried on during cold weather and to prevent damage to the work. Hest shall be furnished when and as directed by the Engineer, by means of portable or fixed units. Each Prime Contractor shall provide and pay for all fuel used in the temporary facilities and shall provide proper smoke pipes or other means to prevent smoke or smudge from marking up walls, ceilings, or other parts of equipment.

62. SANITARY REGULATIONS AND PROVISIONS

When there is more than one Contractor on a project, each Prime Contractor shall provide ample washroom and toilet facilities and drinking water supply as required for their own needs, and shall prohibit and prevent the committing of nuisances on the site of the work, or on adjoining property.

Ample washroom and toilet facilities and a drinking water supply shall be furnished and maintained in strict conformity with State and County Health Laws.

63. FIELD OFFICES

Each Contractor shall erect, furnish and maintain a field office with a telephone at a location approved by the Engineer, during the entire period of construction. He, or an authorized agent, shall be present at his office at all times while his work is in progress. Readily accessible copies of the Contract Documents, project schedule, approved shop drawings, marked up red lined "Record" drawings, showing field changes, wage rates, required OSHA and Labor Law information, and all other pertinent information shall be kept at his field office.

The Contractor, or in the case of structures and buildings, the General Contractor shall provide a separate field office at the site for use by the Engineer and the Owner's representative.

The Contractor shall submit for approval a plan of the office facility within twenty days following the signing of the Contract. The Engineer's field office shall be on site, furnished, electrified and provision made for connection of water and sewage prior to the start of any major construction work. Subject to the Engineer's approval, the Contractor may provide office space in an existing building.

The field office shall be of substantial weatherproof construction with a usable floor space of not less than 10'x 30' (a standard office trailer) and provided with at least three windows for light. Air conditioning will be provided. Drinking water and a water cooler for drinking water shall be furnished. Two (2) separate washrooms with toilet facilities shall be provided in the office, equipped with a sewer connection or septic tank, a plumbing system and hot and cold running water. A separate self contained toilet facility will be allowed as an alternate if a public sewer is not available. An approved pressure type oil heater or other suitable heating equipment which will heat the office to a temperature of 72 degrees at 0 degrees F. outside temperature shall be furnished and installed. Electric wiring and fixtures and direct line telephone shall be furnished and installed as directed by the Engineer.

The field office is identified as a place of employment by the Clean Indoor Air Act (CIAA) where smoking is not permitted.

The office shall have the following furniture:

1 – Reference table (30" x 60")
1 – Suitable office desk with drawers and locks
1 – Drafting table (with lamp) and drafting stool
4 – Chairs
1 – Steel supply cabinet with not less than 16 square feet of shelf space
1 – Four-drawer steel file cabinet with lock
1 – Plan holding rack
1 – Coat rack
1 – Telephone with Recorder Answering Machine
2 – Waste baskets
1 – First aid cabinet (as required by OSHA)
2 – Fire extinguishers (as required by OSHA)
1 – Electric calculator
1 – Photo copying machine (dry type copies), paper, toner
1 – Fax Machine with dedicated separate phone service
1 – Cellular Telephone with service one month past the completion date, available adaptors, chargers, and a total of two batteries
1 – Cocoa door mat 18" x 24"

The Contractor shall provide the Engineer with a cellular telephone with both a wall and car charger for the duration of the Contract. The Contractor shall provide at his own expense, for the Engineer's cellular telephone use costs for the duration of the Contract. The Contractor shall also furnish for the duration of the Contract a digital camera with the following minimum features: 10 megapixels, 12x optical zoom, 8 GB memory card, rechargeable lithium battery,

USB cable and a case. The Contractor shall also furnish for the duration of the Contract a laptop computer free of miscellaneous files pictures etc., with the following minimum features:

- Intel Core 15 Processor
- Windows Operating System (Windows 7 Pro.)
- MS Office 2010
- 6 GB Ram
- 500 GB Hard Drive
- Power cord and rechargeable battery
- Optical mouse
- Optical Drive DVD±RW/CD-RW
- Internet Explorer
- Contractor to provide a Wireless Internet Card connection at his own expense compatible with the laptop for the duration of the contract.
- Inkjet Printer compatible with the laptop for the duration of the contract.
- Scanner compatible with the laptop for the duration of the contract.
- Dust Covers for all Electronic Pieces for the duration of the contract.
- Laptop case

The Contractor shall provide at his own expense, all heating, lighting, air conditioning, telephone, water, plumbing, and janitorial service for the duration of the Contract.

After the acceptance of the Contract, the building and equipment shall become the property of the Contractor. All records shall be delivered to the Owner at the completion of the job.

The Contractor shall provide and maintain a gravel, cinder or slag road to the office, and a parking area adequate for four cars adjacent to the office. Snow removal for the office parking and access road shall be included as maintenance. The Contractor shall restore, at his own expense, all areas disturbed by the field office to the satisfaction of the Engineer.

The field office shall be maintained until the final acceptance of the project.

A sign shall be furnished on the outside of the Field Office. The sign shall be 2' – 0" x 3" – 0" x ¾" thick marine plywood with white background and black letters.

The sign shall have the words FIELD OFFICE painted across the top, and shall also contain the following information:

Engineer's Name
Engineer's Mailing Address
Telephone Number (Both Main Office/Field Trailer)
Project Name

64. PROJECT SIGN

The Contractor or the General Contractor in the case of more than one Contract, shall provide and maintain at the site a project sign conforming to the following:

A. Sign shall be 8 feet wide and 4 feet high, constructed of construction grade dressed lumber framing and grade A-B exterior plywood panels. Framing shall be solidly built of 2" x 4" stock with 4" x 4" support posts. Plywood panels shall be installed on the framing and well nailed along all supports. The entire sign shall be painted with approved paint as follows:

1 coat primer
1 coat exterior enamel undercoater
2 coats exterior enamel

B. The field sign shall be painted white. Lettering shall be black. The sign shall show the items of the legend in letters varying from 2" to 6" high according to the approved text. A complete layout of the sign shall be submitted for approval. The text shall show all pertinent information as shown on the Project Sign Detail of these Specifications, Page GCC-38, as may be required by the Owner.

C. The sign shall be erected in a substantial manner with adequate bracing, at the location directed by the Engineer. The Contractor shall protect the sign from injury during the continuance of the work under the Contract and shall do all patching of lettering, painting and bracing thereof necessary to maintain same in first class condition and in proper positions. At the expiration of all work under the Contract, the project sign shall be removed by the Contractor. The Contractor shall restore, at his own expense, all areas disturbed by the project sign to the satisfaction of the Engineer.

In certain situations, the Owner may still be in negotiation with railroad, utilities companies, etc. In these cases, the Owner shall complete negotiations and pay the full amount necessary to procure said permits, licenses, etc. No additional payment will be made to the Contractor for any delay in acquisition of the permit, license, or easement by the Owner. Delays will be considered an extension of time if requested by the Contractor in writing.

If changes in the work or alignment or the Contractor's methods of construction require that additional permit(s) be obtained, the cost for such permits and any delays in construction associated therewith shall be borne by the Contractor.

68. LAWS, TAXES

A. The Contractor shall comply with all laws, ordinances, rules and regulations affecting the work, and shall give proper public authorities all requisite notice in connection with the work. The Contractor shall be solely responsible for any damage resulting from his neglect to obey all laws, regulations, rules and ordinances, and should he perform any work called for by the Specifications or Drawings, knowing it to be contrary to such laws, regulations, rules and ordinances, and without notifying the Engineer, in writing, and obtaining written consent to proceed, he shall bear all costs and damages arising therefrom.

B. The Contractor shall pay all taxes, applicable to the work and materials supplied under this Contract, it being understood that in no case shall any such tax be borne by the Owner.

69. HOURS AND WAGES

A. No laborer, workman, or mechanic in the employ of the Contractor, subcontractor or other person doing or contracting to do the whole or part of the work contemplated by this Contract shall be permitted or required to work more than eight hours in any one calendar day or more than five days in any one week except in case of extra-ordinary emergency as described in Section 220(2) of the New York State Labor Law.

B. The wages and supplements to be paid to laborers, workman or mechanics performing work under this Contract shall be not less than the prevailing rate of wages and supplements as defined and determined by the New York State Labor Law. On projects involving both State and Federal agencies, the Contractor shall obtain the Federal Wage rates and apply the higher rate for the trade or occupation. The prevailing rate of wages for New York State are attached to these Specifications in Appendix "A". The Contractor is responsible for all modifications to the prevailing wage rates that may occur during the course of the Contract.

C. There shall be paid each laborer or mechanic of the Contractor or subcontractor engaged in work on the project under this Contract in trade or occupation listed below, not less than the hourly wage rate set opposite the same, regardless of any contractual relationship which may be alleged to exist between the Contractor or any subcontractor and such laborers and mechanics.

D. Any laborer or mechanic employed to perform work on the project under this Contract, which work is not covered by any of the classifications, of the various State and Federal agencies, shall be paid not less than the minimum rate of wages specified herein for the classification which most nearly corresponds to the work to be performed by him and such minimum wage rate shall be retroactive to the time of initial employment of such person in such classification. In the event any dispute on that question cannot be adjusted, the information, together with the recommendations of the Owner's Engineer or its other authorized representatives, shall be referred for determination to the Owner's governing body or other duly designated official whose decision on the question shall be conclusive on the parties to the Contract with the same effect as if the work performed by such laborer or mechanic had been classified and the minimum rate specified herein.

E. The foregoing specified wage rates are minimum rates only. The Owner will not consider any claims or additional compensation made by the Contractor because of payment by the Contractor of any wage rate in excess of the applicable rates contained in this Contract. All disputes in regard to the payment of wages in excess of those specified in this Contract shall be adjusted and resolved by the Contractor.

F. Except as may be otherwise required by law, all claims and disputes pertaining to the classification of labor employed on the project under this Contract shall be decided by the Owner's governing body or other duly designated officials, or the New York State Department of Labor.

70. POSTING MINIMUM WAGE RATES

The Contractor shall post at appropriate conspicuous points at the site of the project a schedule showing all determined minimum wage rates for the various classes of laborers and mechanics to be engaged in work on the project under this Contract and all deductions, if any, required by law to be made from unpaid wages actually earned by the laborers and mechanics so engaged. The wage rates shall be posted on a sign written in English with a bold heading stating "Prevailing Rate of Wages". The lettering of the heading shall be no smaller than 2" in height and 2" in width and the entire sign shall be weatherproof. On projects involving both State and Federal agencies the Contractor may be required to post both State and Federal Wage Rates, the higher of which shall apply in any classification.

71. PAYROLL RECORDS

The Contractor and all subcontractors will be required to furnish to the Engineer duplicate copies of all payrolls incurred as a result of work on the project. Payrolls are to be submitted on U.S. Department of Labor Payroll Form WH-347, signed by an officer of the company, no later than three days after the close of any payroll period and not in any case later than the Contractor's monthly payment estimate. Prime Contractors are required to submit certified payrolls from the issuance of the Notice to Proceed until contract close out. Negative reports shall be submitted for times when no actual work is being performed. Subcontractors are required to submit certified payrolls for only the time spent on the project.

Per the SPOTA Bill, the individual designated as the person responsible to collect certified payroll is the engineer in charge of the project. This person's name shall be posted in a conspicuous location at the project site.

The filing of certified payrolls is a condition of payment. A contractor that willfully fails to file certified payrolls shall be guilty of a Class "E" felony and subject to a civil penalty of up to $1,000.00 per day.

Upon completion of the contract work, the prime Contractor shall be required to execute a Public Improvement Contract Certification for (PICC-2) certifying that the provisions of Section 220-a of the New York State Labor Law have been complied with and that all laborers, workman or mechanics employed by the Contractor on this project have been paid the applicable prevailing wage rates and supplements.

Upon completion of the contract work, all subcontractors to the prime Contractor shall be required to execute a Public Improvement Contract Certification form (PICC-1) certifying that the provisions of Section 220-a of the New York State Labor Law have been complied with and that all laborers, workman or mechanics employed by the subcontractor for work done on this project have been paid the applicable prevailing wage rates and supplements.

Final payment will not be issued until all forms have been properly executed by the prime contractor and subcontractors.

72. APPRENTICES

The minimum wage rates, if any, herein specified, for apprentices, shall apply only to persons working with the tools of the trade they are learning under the direct supervision of journeymen mechanics. Except as otherwise required by law, the number of apprentices in each trade or occupation employed by the Contractor or any subcontractor shall not exceed the number permitted by the applicable standards of the United States Department of Labor or in the absence of such standards, the number permitted under the usual practice prevailing between unions and the employer's associations of the respective trade of occupations.

73. COMPUTATION OF WAGES ON EIGHT HOUR DAY: OVERTIME COMPENSATION

The wages of each laborer and mechanic engaged in work on the project under this Contract shall be computed on a basic day rate of 8 hours per day, 8 hours of continuous employment, except for lunch periods, constituting a days work when a single shift is employed, and 7 ½ hours of continuous employment except for lunch period constituting a days work when 2 or more shifts are employed. Work in excess of 8 hours per day shall be permitted upon compensation when a single shift is employed, at a minimum of 1 ½ times the basic rate of pay (i.e., the rate actually payable to the laborer or mechanic, which may be higher but not lower than the minimum wage set forth in the foregoing schedule) for all hours worked in excess of 8 hours, on any one day and when two or more shifts are employed, at a minimum of 1 ½ times the basic rate of pay for all ours worked in excess of 7 ½ hours on any one day. In addition, all

laborers and mechanics shall receive compensation at a rate not less than 1 ½ times their basic rate of pay for all hours of work in excess of forty in one week when one shift is employed and all hours of work in excess of thirty-seven and one-half in one work week when two shifts are employed. The provisions of this article shall not limit agreements to the contrary, mandatory overtime compensation in excess of that stipulated herein and such extra compensation shall not constitute a claim for additional compensation under this Contract.

74. WAGE UNDERPAYMENTS AND ADJUSTMENTS

The Contractor agrees that in case of underpayment of wages to any worker on the project under this Contract by the Contractor or any subcontractor, the Owner shall withhold from the Contractor out of payments due, an amount sufficient to pay such workers the difference between the wages required to be paid under this Contract and the wages actually paid such worker for the total number of hours worked, and that the Owner may disburse such amount so withheld by it for and on account of the Contractor to the Employee to whom such amount is due. The Contractor further agrees that the amounts to be withheld pursuant to this paragraph may be in addition to the percentages to be retained by the Owner pursuant to other provisions of this Contract.

75. PAYMENT OF EMPLOYEES

The Contractor and all subcontractors shall comply with the Regulations of the Secretary of Labor made pursuant to the Anti-Kickback Act of June 30, 1940, 40 U.S.C. 276(c) and any amendments of modifications thereto. The Contractor and all subcontractors shall furnish the Owner with weekly statements of compliance. In case of subcontracts, the Contractor shall cause appropriate provision to be inserted in any subcontracts for the work which he may let to insure compliance with said Anti-Kickback Law by all subcontractors subject thereto, and the Contractor shall be responsible for the submission of all statements of compliance required of subcontractors by said Anti-Kickback Act except as the Secretary of Labor may specifically provide for reasonable limitations, variations, and exemptions from the requirements thereof.

The Contractor and each of his subcontractors shall pay each of his employees engaged in work on the project wages in full in cash and not less often than once every other week, less legally required deductions. Provided that when circumstances render payment in cash infeasible or impracticable, payment by check may be effected upon consideration that funds are made available in a local bank and checks may be cashed without charge, trade requirements, or inconvenience to the worker. In any event, records of such payment, deductions, and hours worked shall be provided each employee with each payment of wages.

76. PAYMENT BY CONTRACTORS

The Contractor shall pay (a) for all transportation and utility services not later than the 20th day of the calendar month following that in which such services are rendered, (b) for all materials, and equipment which are delivered to and properly stored at the project site or in an approved warehouse to the extent of 90 percent thereof, not later than the 15th day following each payment to the Contractor and the balance of the cost thereof not later than the 15th day

following the completion of that part of the work in or on which such materials and equipment are incorporated or used, and (c) to each of his subcontractors, not later than the 7th day following each payment to the Contractor, the respective amounts all owed the Contractor on account of the work performed by his subcontractors to the extent of each subcontractor's interest thereon.

77. NOTICE TO PROCEED

Work shall be started on the Contract within 5 days of the Notice to Proceed given by the Owner. If the Contractor starts work prior to the Notice to Proceed, such action shall be deemed a waiver of such notice. No work shall proceed without Owner's approval of the Contractor's required bonds, insurance and MBE/WBE program.

78. CONSTRUCTION SCHEDULE

Within 5 days after the date of the Notice to Proceed with this Contract, the Prime (General) Contractor on the project shall submit to the Engineer for review, six copies of his own proposed construction schedule showing in detail the proposed sequence of the work, the plan and means and methods of construction to be employed, and the estimated date of starting and completing each stage of the work in order to complete the Project within the contract time. If so required by the Engineer, the schedule shall be revised.

After review, sufficient additional copies of the reviewed schedule shall be submitted to the Engineer. The Engineer will transmit copies to each of the other Prime Contractors (should there be more than one Contract) for their use in preparing their construction schedules. They are to prepare their schedules and submit to the Engineer for acceptance. The General Contractor shall afford sufficient time in his schedule to allow the other prime contractors to coordinate and perform their work.

A. The Prime Contractor on each Contract shall adhere to the reviewed work schedule for his Contract. In the event a Contractor does not adhere to his work schedule and causes other Contractors to be damaged, the Contractor causing the delay shall save the Owner and Engineer harmless from all actions and charges of the other Contractors against the Owner or Engineer caused by said delay. The Engineer shall make such changes in the construction schedule as he may deem necessary.

B. Each Prime Contractor shall be responsible for the proper coordination of all work so as to maintain the schedules as accepted. Should any Contractor fail to adhere to any phase of the accepted schedule, he shall promptly adopt such additional means or methods of construction, including overtime, as may be required to make up lost time and complete each phase of his work in accordance with the schedule, all at no additional cost to the Owner.

C. Any additional engineering services required due to failure to complete the work according to schedule and within the time of completion allowed or required overtime to make up lost time, will be paid by the Contractor as stated in Paragraph 36 ADDITIONAL ENGINEERING SERVICES, on page GCC-20 of the General Contract Conditions.

D. Failure to progress the work in accordance with the schedule submitted and accepted by the Engineer, may at the discretion of the Engineer be construed as a failure to comply with the terms of the Contract and the owner may thereupon cancel the Contract in accordance with Paragraph 100 of the General Contract Conditions.

E. The construction schedule shall be reviewed monthly and updated if required.

79. ADDITIONAL SUBMITTALS

The Contractor shall also furnish on forms to be approved by the Owner: (a) a detailed estimate giving a complete breakdown of the Contract price, and (b) periodic itemized estimates of work done for the purpose of making partial payments thereon. As specified in paragraph 96 of the General Contract Conditions, the value employed in making up any of these schedules will be used only in determine the percent completion on the job site.

80. SUBCONTRACTING

A. The Contractor shall utilize the services of specialty subcontractors on those parts of the work which, under normal contracting practices, are performed by specialty subcontractors; provided that if the Owner shall determine that the specialty work in question has been customarily performed by the Contractor's own organization and that such organization is presently competent to perform such work, the Contractor shall be permitted to do so. Provided further, that if the Owner shall determine that the performance of any specialty work by specialty subcontractors will result in materially increased cost or inordinate delays, the requirements of this paragraph shall not apply.

B. The Contractor shall not award any work to any subcontractor without prior written approval of the Owner, which approval will not be given until the Contractor submits to the Engineer a written statement concerning the proposed award to the subcontractor, which statement shall contain such information as the Engineer may require to make recommendations to the Owner. The Owner will then notify the Engineer of its decision, who shall make such decision known to the Contractor.

C. The Contractor shall not award more than 50% of the contract work to the subcontractors without prior written approval of the Owner.

D. Each Prime Contractor shall be as fully responsible to the Owner for the acts and omissions of his subcontractors, and of persons either directly or indirectly employed by them, as he is for the acts and omissions of person directly employed by him.

E. Each Prime Contractor shall cause appropriate provisions to be inserted in al subcontracts relative to the work to bind subcontractors to the Contractor by the terms of the General Contract Conditions and other Contract Documents insofar as applicable to the work of subcontractors. The Prime Contractor has the same power with regard to terminating any

subcontract that the Owner may exercise over the Contractor under any provision of the Contract.

F. Nothing contained in this Contract shall create any contractual relation between any subcontractor and the Owner.

G. Each Prime Contractor shall submit a list of all subcontractors and major suppliers to be used on this Contract prior to the start of work for approval of the Owner.

81. COORDINATION WITH OTHER CONTRACTORS

A. The Owner will provide for General Services During Construction and Resident Construction Observation on the project. Job meetings will be conducted and the Owner will be kept informed as to the progress of the project and to whether or not construction progress schedules are being met.

B. Where there is more than one Prime Contractor on a project involving structures or buildings, each Prime Contractor shall be responsible for the coordination of the entire project with the other Contractors. Cooperation will be required in the arrangement for the storage of materials and in detailed execution of the work. Each Prime Contractor, including his subcontractors, shall keep himself informed of the progress and the detail work of other Contractors and shall notify the Engineer immediately of lack of progress or defective workmanship on the part of other Contractors, where such defective workmanship will interfere with his own operations. Failure of each Prime Contractor to keep informed of the work progressing on the site and failure to give notice of lack of progress or defective workmanship by others shall be construed as acceptance by him of the status of the work as being satisfactory for proper coordination with his own work.

C. Each Prime Contractor shall cooperate with the Engineer and other Contractors to the fullest extent to present delays and increased costs in the overall project. He shall familiarize himself with the work of other whose work affects or ties in with his own, and he shall be fully responsible for the finished result of his own work.

Extra cost caused by defective or ill-timed work or by the neglect or refusal of a Contractor to provide or complete any portion of his work at the proper time and in the proper manner, shall be borne by the Contractor at fault and at no additional cost to the Owner.

D. To insure the proper execution of his subsequent work, the Contractor shall measure work already in place, and shall at once report to the Engineer any discrepancy between the executed work and the Drawings.

E. Each Contractor shall provide all openings, chases, etc., required to fit his own work and that of the other Contractors, as shown on the Contract Drawings, or reasonably implied thereby, as confirmed or modified by shop, setting or erection drawings approved by the Engineer. Where pipes or conduits pas through slabs or walls, the sleeves or opening forms shall be provided and placed by the installer of the pipes or conduits. Where hanger inserts and

similar items are required, they shall be furnished and placed by the installer of the pipe or other equipment requiring the hangers.

Any cost caused by defective, ill-timed or mislocated work shall be borne by the Contractor responsible therefore. No Contractor shall endanger any work by cutting, digging or otherwise, and no Contractor shall alter the work of any other Contractor without the consent of the Engineer and the Contractor involved.

F. In disputes between Contractors, the decision of the Engineer shall be binding upon all parties.

82. CHANGES IN THE WORK

A. The Contractor shall do such additional work, other than that designated in the estimate of quantities, as may be ordered in writing by the Engineer, to complete fully the work as planned and contemplated.

B. The Engineer shall have authority to order minor changes in the work not involving an adjustment in the Contract sum or extension of the Contract time and not inconsistent with the intent of the Contract Documents. No change other than such minor changes shall be made unless in the form of a written order form the Engineer, countersigned by the Owner, and no claim for an addition to the contract sum shall be valid unless so ordered.

C. The Owner reserves the right at any time to contract for and perform other or additional work on or near the work covered by the contract.

D. The value of any change shall be determined by one or more of the following methods prior to the start of such additional work:

Method "A" By prices specifically named in the Proposal Section of the Specifications. Unit prices previously approved are acceptable for pricing changes of original bid items. However, when changes in quantities exceed 15 percent of the original bid quantity and the total dollar change of that bid item is over $15,000, the unit price shall be reviewed by the owner to determine if a new unit price should be negotiated. Unit prices of new items shall be negotiated.

Method "B" By acceptance of agreed unit prices based on the estimated cost plus overhead and profit as applicable.

Method "C" By estimate of the actual cost of labor and materials plus overhead and profit, cost to be determined as the work progresses.

Method "D" By actual cost of labor and materials plus overhead and profit, cost to be determined as the work progresses.

Method "E" By estimate of the value as deductible from the reviewed detailed estimate.

Method "F" The invoiced cost for utility relocation work as furnished by the respective Utility Company and negotiated by the Owner.

Overhead shall be defined as an allowance to compensate for all costs, charges and expenses, direct or indirect, except for the actual cost of labor and material as defined following. Overhead shall be considered to include, but not be limited to all required project insurances, such as General/Personal Liability, Auto Liability, Excess Liability, Property Damage, etc., bond or bonds, field and office supervisors and assistants above the level of foreman, use of small tools and minor equipment, incidental job burdens, general office expense, preparation of cost claim estimates, back up documentation for the processing of change orders, etc. Overhead and profit cannot be applied to payroll taxes such as unemployment insurance, FICA, and workman's compensation. These costs must be added to the modification cost after overhead and profit is applied.

Actual cost of labor and material shall be defined as the amount paid for the following listed items, to the extent determined reasonable and necessary. The Contractor will be required to provide the necessary back-up documentation to substantiate claimed cost.

Item 1 Cost of materials delivered to the job site for incorporation into the Contract work.

Item 2 Wage paid to workmen and foremen and wage supplements paid to labor organizations in accordance with current labor agreements.

Item 3 Premiums and taxes paid by the Contractor for worker's compensation insurance, unemployment insurance, FICA tax and other payroll taxes as required by law, not of actual and anticipated refunds and rebates.

Item 4 Sales taxes paid as required by law.

Item 5 Allowance for use of construction equipment (exclusive of hand tools and minor equipment), as accepted for use by the Engineer-in-change. The rate of self-owned equipment used for periods of under one week will be based on the Rental Blue Book's published monthly rate divided by 22 days to establish a daily rate and divided again by eight hours to establish an hourly rate. Equipment used for periods of five days or more will be billed at a rate equal to 45 percent of the published monthly rate. In the alternative, the Engineer-in-charge may approve for reimbursement a rate representing the allocable costs of ownership. Self-owned equipment is defined to include equipment rented from controlled or affiliated companies. Rented equipment will be paid for at the actual cost. When, in the opinion of the Contractor, and as approved by the Engineer-in-charge, suitable equipment is not available on the site, the moving of said equipment to and from the site will be paid for at actual cost.

Item 6 When the material furnished under Item (1) is used material, its value shall be pro-rated to the value of new material, but should be no more than its cost. When

the salvage value of salvable material furnished under Item 1 exceed the cost of salvage, a suitable credit shall be given the Owner.

If the work is done directly by the Contractor, overhead in an amount of 10% may be added if method ("B"), ("C"), or ("D") is used and to the cost of the labor and materials plus overhead there may be added 10% for profit. The percentages for overhead and profit may vary according to the nature, extent and complexity of the work involved, but in no case shall exceed the percentages set forth in this paragraph. No percentages for overhead and profit will be allowed on payroll taxes or on the premium portion of overtime pay.

If the work is done by a subcontractor, subcontractor's overhead in the amount of 5% may be added to cost of labor and materials if method ("B"), ("C") or ("D") is used and to the cost of labor and materials plus overhead there may be added 10% for the subcontractor's profit. To this amount there may be added 10% for the Contractor's combined overhead and profit. No percentage for overhead and profit will be allowed on payroll taxes or on the premium portion of overtime pay.

The Owner shall determine by which of the foregoing methods the value of any changes shall be computed.

In computing the value of a change order which involves additions and deductions of work and the added work exceeds the omitted work, overhead and profit shall be computed on the amount by which the cost of additional labor and material exceeds the cost of the omitted labor and material, except no additional overhead and profit shall be allowed on value of work determined by Method "A" or Method "F".

In computing the value of a change order which involves deductions and additional of work and the omitted work exceed the added work, the Contractor will be allowed to retain the overhead and profit on the amount which the omitted work exceeds the added work, except that no overhead and profit shall be retained on value of work determined by Method "A".

The Contractor may retain overhead and profit on a change order which involves deductions only, except that no overhead and profit shall be considered on value of work determined by Method "A" or Method "F".

E. On Construction Projects which involve Federal and/or New York State grant assistance, the following additional guidance will apply to change orders:

1. For each change order not in excess of $100,000 the Contractor shall submit sufficient cost and pricing data to the Owner to substantiate the necessity and reasonableness of costs and amount proposed, and the allowability and eligibility of costs proposed.

2. For each change order in excess of $100,000, the Contractor shall submit to the Owner for review sufficient cost pricing data as described in the following paragraphs to

substantiate the necessity and reasonableness of costs and amounts proposed, and the allowability and eligibility of costs proposed.

a. As a minimum, proposed change order costs shall be presented in a summary format acceptable to the Owner and shall be supported by a certification executed by the Contractor that proposed costs reflect complete, current and accurate cost and pricing data applicable to the date of the change order.

b. In addition to the specific elements of cost, the estimated amount of profit shall be set for the separately in the cost summary for fixed price change orders and a specific total dollar amount of profit will be set forth separately in the cost summary for cost reimbursement change orders.

c. More detailed cost data than that required by the summary format may be required by the Owner to substantiate the reasonableness of proposed change order costs when the Contractor is unable to certify that proposed change order costs are complete, current and accurate.

d. The Contractor's actual costs, direct and indirect, allowable for Federal participation shall be determined in accordance wit the terms and conditions of the Contract, and the generally accepted cost principles contained in the Federal Guidelines established by the Comptroller General of the United States and the U.S. Department of Labor. Examples of costs which are not allowable under those cost principles include, but are not limited to, entertainment, interest on borrowed capital and bad debts.

e. For costs under cost reimbursement change orders, the Contractor shall have an accounting system in a manner consistent with his normal accounting procedures, which accounts for such costs in accordance with generally accepted accounting principles. This system shall provide for the identification, accumulation and segregation of allowable and unallowable change orders.

f. Change orders awarded on the basis of review of a costs element summary and a certification of complete, current and accurate cost and pricing data shall be subject to downward renegotiation or recoupment of funds where subsequent audit substantiates that such certification was not based on complete, current and accurate cost and pricing data and on costs allowable under the cost principles contained in the Federal Guidelines established by the Comptroller General of the United States and the U.S. Department of Labor at the time of change order execution.

3. Related work shall not be split into two amendments or change orders merely to keep it under $100,000 and thereby avoid the requirement of paragraph E-2 of this Section.

83. CLAIMS FOR EXTRA COST

If the Contractor claims that any work involves extra work under the Contract, he shall give the Engineer written notice within twenty (20) days of this claim, and in any event before proceeding to execute the work; except in emergency endangering life or property, and the procedure shall then be as provided for changes in the work. No such claim shall be valid unless so made. The Contractor shall not execute the work pending the receipt of an executed change order approved by the Owner, Contractor and Engineer unless he is so instructed by the Owner. Late claims for additional cost will be rejected.

84. DEDUCTIONS FOR UNCORRECTED WORK

If, in the opinion of the Engineer, it is undesirable or inexpedient to replace any defective or damaged materials or to reconstruct or correct any portion of the work injured or not performed in accordance with the Contract Documents, the compensation to be paid to the Contractor hereunder shall be reduced by such amount as in the judgment of the Engineer shall be equitable.

85. TIME OF THE ESSENCE

Inasmuch as the provisions of this Contract relating to the time for performance and completion of the work are for the purpose of enabling the Owner to proceed with the construction of a public improvement in accordance with a predetermined program, such provisions are of the essence of the Contract.

86. DELAYS AND EXTENSION OF TIME

A. If the Contractor shall be delayed in the completion of his work by reason of unforeseen causes beyond his control and without his fault or negligence, including, but not restricted to acts of God, or the public enemy, floods, epidemics, quarantine, restrictions, strikes, riots, civil commotions, freight embargoes, or priority regulations, the period hereinafter specified for completion of his work shall be extended by such time as shall be fixed by the Engineer. Additional engineering services required during this time extension will not be assessed to the Contractor as stated in Paragraph 36, ADDITIONAL ENGINEERING SERVICES, of the General Contract Conditions.

B. No extensions of time shall be deemed a waiver by the Owner of his right to terminate the Contract for abandonment or delay by the Contractor as herein provided or relieve the Contractor from full responsibility for performance of his obligation hereunder.

C. No such extension shall be made for delay occurring more than seven days before claim therefore is made in writing to the Engineer. In the case of a continuous cause of delay, only one claim is necessary.

D. This article does not exclude the recovery of damages for delay by either party under other provisions in the Contract Documents.

E. Under no circumstances shall there be any claims for damages or reimbursement for delay of completion of the work of any Prime Contractor against the Owner, the Engineer, or any other agent or employee of the Owner.

87. CORRECTION OF DEFECTIVE OR UNCOMPLETED WORK BEFORE FINAL PAYMENT

A. The Contractor shall promptly remove from the premises all materials condemned by the Engineer as failing to conform to the Contract, whether incorporated in the work or not, and the Contractor shall promptly replace and re-execute his own work in accordance with the Contract and without expenses to the Owner and shall bear the expense of making good all work that other Contractors destroyed or damaged by such removal or replacement. Acceptance of material and workmanship by the Inspectors shall not relieve the Contractor from his obligation to supply other materials and workmanship when so ordered by the Engineer.

B. If the Contractor does not remove such condemned work and materials within ten (10) days after written notice, the Owner may remove them and may store the materials at the expense of the Contractor. If the Contractor does not pay the expense of such removal within ten (10) days time therefore, the Owner may, upon ten days written notice, sell such materials at auction or a private sale and shall pay to the Contractor the net proceeds thereof, after deducting all the costs and expenses that should have been borne by the Contractor.

C. Neither the final certificate, nor payment, nor any provision in the Plans and Specifications shall relieve the Contractor of responsibility for faulty materials or workmanship and he shall remedy any defects due thereto and pay for any damage to other work resulting therefrom, which shall appear within a period of one year from date of final certificate. The Owner shall give notice of observed defects with reasonable promptness.

88. GUARANTEE AND MAINTENANCE, AND ONE-YEAR CORRECTION PERIOD

A. After acceptance of the work by the Owner and Engineer, 100 percent of the Contract price will be due and payable to the Contractor.

B. Contractor warrants and guarantees to Owner and Engineer that all Work will be in accordance with the Contract Documents and will not be defective. Prompt notice of all defects shall be given to Contractor. All defective work, whether or not in place, may be rejected or corrected as provided in this Paragraph 88.

C. The Contractor shall, in accordance with Owner's written instructions, either correct defective work, or if it has been rejected by Owner, remove it from the site and replace it with non-defective work for a period of one (1) year from the date of issue of the Statement of Completion. If any unsatisfactory condition or damage develops within the one-year correction period or such longer period of time as may be prescribed by law or by the terms of any applicable special guarantee required by the contract documents due to materials or workmanship which were defective, inferior, or not in accordance with the Contract, the

Contractor shall within 7 days after receipt of Notification of such defects, take the necessary action in accordance with Owner's written instructions either correct such defective work, or if it has been rejected by Owner, remove it from the site and replace it with non-defective work. The correction of any defects in equipment, materials and workmanship which may develop during the one-year correction period as described on the Form of Guarantee shall be at the expense of the Contractor. If the Contractor delays beyond twelve (12) days from the date of said notice, the Owner may proceed to have the work done and charge the same to the Contractor and his Surety on the Performance Bond.

D. If there is a material and/or equipment failure within the one-year correction period as described on the Form of Guarantee, aside from making the necessary repairs, the Contractor shall furnish the Owner with an additional performance bond guaranteeing said workmanship and material in the full amount of the repaired item (labor, material) for an additional one year period from the acceptance of said repair work by the Owner.

E. Final payment for the work shall be retainage withheld by the Owner less any charges for corrective work or damages for defective equipment, materials and workmanship or occasioned in correcting the same.

F. The Contractor shall sign and date a written Form of Guarantee to be provided by the Owner attesting that all work performed under the Contract shall be maintained for a period of one (1) year. Such date of the Form of Guarantee shall coincide with the issuance of the date of completion.

89. SURETY BONDS

The Contractor shall furnish and pay for surety bonds each in the amount at least equal to 100 percent of the Contract price as security for the faithful performance of the Contract and for the payment to all persons performing labor and furnishing materials in connection with the Contract. The surety shall be in such form or forms as the Owner may prescribe and with such sureties as he may approve.

90. ADDITIONAL OR SUBSTITUTE BOND

If at any time the Owner shall be or become dissatisfied with any surety or sureties providing the Performance Bond, or if for any other reason such bond shall, in the Owner's opinion, cease to be adequate security to the Owner, the Contractor shall within five (5) days after notice from the Owner, substitute an acceptable bond in such form and sum signed by such other sureties, as may be satisfactory to the Owner. The premiums on such bond shall be paid by the Contractor. No further payments shall be deemed due nor be made until the new sureties shall have qualified.

91. LIENS

Neither the final payment nor any part of the retained percentage shall be come due until the Contractor delivers to the Owner a complete release of all liens arising out of this Contract,

or receipts in full in lieu thereof and an affidavit which certifies so far as he has knowledge or information that the releases and receipts include all the labor and materials for which a lien could be filed; but the Contractor may, if any subcontractor refuses to furnish a release or receipt in full, furnish a bond satisfactory to the Engineer, to indemnify the Owner against any lien. Upon request of the Owner, the Contractor shall at his own expense, by bonding it or otherwise, secure the prompt discharge of any lien or liens which may be filed against the property as a result of this Contract.

92. ASSIGNMENT

Neither party to the Contract shall assign the Contract or sublet it as a whole without the written consent of the other, nor shall the Contractor assign any monies due to him hereunder, without the prior written consent of the Owner.

93. RIGHTS OF VARIOUS INTERESTS

Whenever work being done by the Owner's forces or by other Contractors is contiguous to work covered by this Contract, the respective rights of the various interests involved shall be established by the Engineer, so as to secure the completion of the various portions of the work in general harmony.

94. NO WAIVER OR LEGAL RIGHTS

The Owner or the Engineer shall not be precluded or stopped by any measurement, estimate, or statement, made or given by them, or any agent or employee of the Owner, under any provisions or provisions of the Contract, at any time, either before or after the completion and acceptance of the project and payment thereof pursuant to any measurement, estimate, or statement, from showing the true and correct amount and character of the work performed and materials furnished by the Contractor, or from showing it any time, that any such measurement, estimate or statement is untrue or incorrectly made in any particular, or that the work or materials, or any part thereof do not conform in fact to the Specifications and Contract, and the work or materials, should the said measurements, estimates, statement or payment be found, or be known to be inconsistent with the terms of the Contract or otherwise improperly given, and the Owner shall not be precluded and stopped, notwithstanding any such measurements estimate, statement or payment in accordance therewith, from demanding and recovering from the Contractor and his surety such damages as it may sustain by reasons of his failure to comply with the terms of the Specifications and Contract, or an account of any overpayment or overpayments made on any estimate or statement. Neither the acceptance of the Engineer or any agent or employee of the Owner, nor any estimate or statement by the Engineer, for any payment of money, nor any payment, for, nor acceptance of the whole or any part of the work by the Owner, or the Engineer nor any extension of time, nor any possession taken by the Owner or its employees, shall operate as a waiver of any portion of the Contract or of any power herein reserved by the Owner or any right to damages herein provided, nor shall any waiver or any breach of the Contract be held to be a waiver of any other or subsequent breach.

95. COMPENSATION TO BE PAID TO CONTRACTOR

The Contractor will be paid the bid unit and lump sum prices for the quantities of work which he performs, under the items of work included in the Contract. The sum total for these items shall constitute full payment for the job complete, tested and ready for use.

It is understood by the parties that this agreement shall be executory only to the extent of the monies available to the County of Erie and appropriated therefore, and no liability on account thereof shall be incurred by the County beyond monies available and appropriated for the purpose thereof.

96. ESTIMATES AND PAYMENTS

A. In computing the amount of the estimates of work done, the unit prices bid will be used when the bid is on a unit price basis. On lump sum bids the Contractor shall, within three weeks after award of the Contract, prepare and submit to the Engineer for review, a breakdown of all lump sum bid prices contained in the Contract with the total prices apportioned into component parts of the various types and categories of material and labor involved in each lump sum item. After review by the Engineer, this breakdown will be used as a basis for preparing partial estimates and establishing progress payments.

B. When the project has been completed in accordance with the Plans and Specifications, and has been accepted, payment in full will be recommended by the Engineer provided the work is accepted on or before the specified completion or any authorized extension thereof. Failure to complete the work tasks in the manner specifically described by the specification will cause for an equitable reduction in the contract's unit and/or lump sum bid price as determined by the Engineer.

In making up the final estimate, the linear measurement made along the horizontal axis of the surface of the finished work will be considered the length of the work. All estimates including the final, will be made for actual quantities of work performed and materials in place as determined by the measurement of the Engineer, and this determination as to the quantities involved in any Contract shall be accepted as final, conclusive and binding upon the Contractor.

The final certificate of completion will constitute the acceptance of the work by the Engineer except as to the work thereafter found to be defective. The date of such certificate of completion shall be regarded as the date of acceptance of the work.

C. For computation of the quantities to be paid for under the various items of this Contract, it is agreed that the planimeter shall be considered an instrument of precision and quantities computed from areas obtained by its use shall be accepted by all parties hereto as accurate.

D. The acceptance by the Contractor of final payment shall be, and shall operate as a release to the Owner, of all claims and all liability to the Contractor for all things done or furnished in connection with this work, and for each act and neglect of the Owner and others

relating to or arising out of this work. No payment, however, final or otherwise, shall operate to release the Contractor or his sureties from any obligations under this Contract, the Performance Bond or the payment Bond.

E. When requesting a reduction of retainage, the Contractor will provide the Owner with a letter of consent from his surety company.

97. OWNER'S RIGHT TO WITHHOLD PAYMENTS

The Owner may withhold from the Contractor so much of any recommended payments due him as may in the judgement of the Owner be necessary:

(a) to assure the payment of just claims then due and unpaid of any persons supplying labor or materials for the work.

(b) to protect the Owner from loss due to defective work not remedied.

(c) to protect the Owner from loss due to injury to persons or damage to the work or property of other Contractors, subcontractors, or other caused by the act or neglect of the Contractor or any of his subcontractors. Owner shall have the right as agent for the Contractor to apply any such amounts so withheld in such manner as the Owner may deem proper to satisfy such claims or to secure such protection. Such application of such money shall be deemed payments for the account of the Contractor.

(d) a reasonable doubt that the Contract can be completed for the balance then unpaid.

(e) damage to another Contractor.

(f) to assure the payment of just claims by the Engineer for additional engineering services required for any work beyond the stated time of completion or approved time extension for this Contract.

When the above grounds are removed, payment shall be made for amounts withheld because of them.

98. FINAL REVIEW AND TIME OF COMPLETION

A date for final review of the work by the Engineer and Owner shall be set by the Contractor in a written request therefore, which date shall be not less than ten (10) days after the date of such request. Prior to the final review, the various items of equipment and related work shall be placed in operation by the respective Contractors whose work is involved, to satisfactorily demonstrate that the various elements of work will operate in accordance with the intent of the Plans, Specifications and approved shop drawings.

After these tests, the respective Contractors shall certify in writing to the Engineer and Owner that they have observed such tests, and that they approve of the installation and operation. The duration of the tests shall be not less than 24 hours.

The work will be deemed complete as of the date so set by the Contractor, if, upon such review the Engineer determines that no further work remains to be done at the site. However, if such review, in the opinion of the Engineer, reveals items of work still to be performed, the Contractor shall promptly perform them and then request another review. If, under any subsequent review, the Engineer determines that the work is complete, the date of completion shall be deemed to be the actual date of such subsequent review, which shall be made not less than one (1) nor more than ten (10) days after the date of the request therefore.

In the event that certain portions of the work are required to be placed in use before completion of all work included under the Contract, the Contractor shall request a review of such portions of the work so required in the same manner as specified above for final review.

During such reviews, the work shall be clean and free from materials which would interfere with the review.

In no case will the final estimate be prepared until the Contractor has complied with all the requirements set forth and the Engineer has made his final review of the entire work and is satisfied that the work has been properly and satisfactorily constructed in accordance with the requirements of the Plans and Contract Documents.

99. STATEMENT OF COMPLETION AND FINAL AFFIDAVITS AND CERTIFICATES

Upon the completion of all work whatsoever required, the Engineer shall file a written Statement of Completion with the Owner, and with the Contractor, as to the entire amount of work performed and compensation earned by the Contractor, including extra work and compensation therefore. The Contractor shall guarantee (parts, labor, materials and equipment) his work for a period of one (1) year from the date of issue of the State of Completion. The Owner, Engineer and contractor shall all sign and date the Statement of Completion attesting that all work has been completed satisfactory and the final Contract amount is correct.

The Contractor will be required to complete and submit all necessary contract closeout certifications and affidavits as required by the Owner. Such documents as the Form of Affidavit, Form of Guarantee, Engineer's Certificate, Prime Contractor Certificate (PICC-2), Subcontractor Certifications (PICC-1), Final Change Order, MBE/WBE Utilization Report, Apprenticeship Utilization Certificate, Weekly Payroll Certifications, etc., must be completed and executed by the Contractor prior to contract close-out and the release of final payment and contract retention.

100. RIGHT OF THE OWNER TO TERMINATE

A. The Owner shall have the right to terminate this Contract if:

(1) A receiver or liquidator shall be appointed for the Contractor for any of his property, and shall not be dismissed within 20 days after such appointment; or

(2) The Contractor fails to perform this Contract in accordance with its terms, conditions and specifications; or

(3) The Contractor shall refuse or fail, after Notice from the Engineer, to supply enough properly skilled workmen or proper materials; or

(4) The Contractor shall refuse or fail to prosecute the work or any part thereof with such diligences as will insure its completion within the period specified (or any duly authorized extension thereof) or shall fail to complete the work within the said period, or in accordance with his approved construction schedule as submitted to the Owner and Engineer; or

(5) The Contractor shall fail to make prompt payment to persons supplying labor or materials for the work; or

(6) The Contractor shall fail or refuse to regard laws, ordinances, rules and regulations or the instructions of the Engineer.

Then, and in such event, the Owner, without prejudice to any other rights or remedy it may have, may, by seven (7) days notice to the Contractor, terminate the employment of the Contractor and his right to proceed, either as to the entire work or (at the option of the Owner) as to any portion thereof as to which delay shall have occurred, and may take possession of the work, and all materials and construction equipment on the site of the work, and may thereupon call upon the surety to complete the Contract or the Owner may, at its option, proceed to complete the work, and may thereupon call upon the surety to complete the Contract or the Owner may, at its option, proceed to complete the work, either by day work or contract, and any funds retained by the Owner and any sum realized from the material and equipment reverting to the Owner shall be applied to pay for the completion of the Project. In such case, the Contractor shall not be entitled to receive any further payment until the work is completed. Nor shall the Contractor be entitled to any damages on account thereof, nor shall such termination affect the right of the Owner to recover against the Contractor or his surety damages which may arise. If the unpaid balance of the compensation to be paid the Contractor hereunder shall exceed the expense of so completing the work (including compensation for additional engineer, managerial, administrative and inspection services and any damages for delay) such excess shall be paid to the Contractor. If such expense shall exceed such unpaid balance, the Contractor and his sureties shall be liable to the Owner for such excess.

101. CONTRACTOR'S RIGHT TO STOP WORK OR TERMINATE CONTRACT

If the work shall be stopped by order of the Court or any other public authority, for a period of three months without act or fault of the Contractor or of any of his agents, servants, employees or subcontractors, the contractor may upon 10 days notice to the Owner, discontinue his performance of the work and/or terminate the Contract, in which event the liability of the Owner to the Contractor shall be determined as provided in Paragraph 100 of the General Contract Conditions except that the Contractor shall not be obligated to pay to the Owner any excess of the expense of completing the work over the unpaid balance of the compensation to be paid the Contractor hereunder.

102. REMOVAL OF EQUIPMENT AND SUPPLIES

In the case of termination of this Contract before completion from any cause whatever, the Contractor, if notified to do so by the Owner, shall promptly remove any part or all of his equipment and materials from the property of the Owner at the expense of the Contractor. Failure to remove such equipment and material shall cause the Owner the right to remove any part or all of such equipment and material at the expense of the Contractor.

103. POWER OF CONTRACTOR TO ACT IN AN EMERGENCY

In case of an emergency which threatens loss or injury of property, and/or safety of life, the Contractor will be allowed to act, without previous instructions from the Engineer, as he sees fit. He shall notify the Engineer thereof immediately thereafter.

Where the Contractor has not taken action, but has notified the Engineer of an emergency threatening injury to persons or damage to the work of any adjoining property, upon authorization from the Engineer to prevent such threatening injury or damage he shall act as instructed or authorized by the Engineer. The amount of reimbursement claimed by the Contractor on account of any such action shall be determined in the manner provided in Paragraph 82 of the General Contract Conditions for the determination of compensation to be paid for extra work.

104. CONTRACTOR'S AND SUBCONTRACTOR'S INSURANCE

A. The Contractor shall procure and maintain at his own expense, and without expense to the Owner, until final acceptance by the Owner of the work covered by the Contract, insurance for liability for damages imposed by law, of the kinds and in the amount hereinafter provided, insurance companies authorized to do such business in the State in which the project is to be performed, covering all operations under the Contract, whether performed by him or by subcontractors. Before commencing the work, the Contractor shall furnish to the Owner, a certified copy of the original policy and such number as Owner may request of a Certificate or Certificates of Insurance in form satisfactory to the Owner, showing that he had complied with this paragraph which certificate or certificates shall provide that the policies shall not be changed or cancelled until written notice has been given to the Owner.

B. Insurance shall be procured by the successful bidder before commencing work, within 15 calendar days after notice of an award, and maintained without interruption for the duration of the Contract, and at all times the Contractor may be correcting, removing or replacing defective work in accordance with Paragraph 88 in the kinds and amounts specified below:

		Each Occurrences
1.	Commercial General Liability -General Aggregate -Products Completed Operations -Blanket Broad Form -Contractual Liability -Broad Form Property Damage -X.C.U. (Explosion, Collapse, Underground Hazard)	$1,000,000 $2,000,000 $2,000,000
2.	Automobile Liability, including: -Owned -Hired -Non-Owned	$1,000,000
3.	Excess Umbrella Liability	$5,000,000
	Comprehensive General, Automobile Liability and Excess "Umbrella" Liability shall name the County of Erie as additional insured.	
4.	Workers' Compensation	Statutory
5.	New York Disability	Statutory

6. Builders' Risk-All Risk/Installation Floater. The Policy is required. The Prime Contractors shall procure and maintain insurance against loss by fire, lightning, extended coverages, theft, vandalism and malicious mischief, collapsed and water damage, upon all work in place and all materials and equipment stored on and off the building site. This insurance shall be in an amount equal to the full insurable value (contract amount) at all times and shall include the interests of Owner, Contractor, Subcontractors, each of whom is deemed to have an insurable interest and shall be listed as an insured. The Policy must carry the County of Erie as the named insured. The Owner shall be furnished with a certified copy of the policy prior to the commencement of work.

The policies of insurance required under this Paragraph 104.B.6 shall provide that neither the Owner nor the Contractor, nor their insurers, shall have any right of subrogation against any of the other parties enumerated in Paragraph 104.B.7. It is the intention of the Owner and Contractor that the policies shall protect al of the enumerated parties and

be primary coverage for any and all losses covered by the insurance described in Paragraph 104.B.6.

7. Waiver of Rights. Owner and Contractor waive all rights against each other and the Subcontractors and their agents and employees and against Engineer and separate contractors (if any) and their subcontracts, agents and employees, for damages caused by fire or other perils to the extent covered by insurance provided under Paragraph 104.B.6, or any other property insurance applicable to the Work, except such rights as they may have to the proceeds of such insurance held by Owner as trustee. Owner or Contractor, as appropriate, shall require similar waivers in writing by Engineer and from each separate contractor and each subcontractor; each such waiver will be in favor of all other parties enumerated in this Paragraph 104.B.7.

8. Owners Contractors Protective Liability Insurance. The Policy is required. The prime Contractors shall obtain insurance issued to and covering the liability for damages imposed by law upon the Contractor with respect to all work under this Contract performed for the Contractors by subcontractors and covering the liability for damages imposed by law upon the Owner with respect to all operations under this contract by the Contractor or by his subcontractors, including omissions and supervisory acts of the Owner and the Agents and employees of the insured. Such insurance shall name as an additional assured or assures the persons or corporation specified in this Contract and the Engineers and architect of the Owner, State and Federal government agencies, and/or the agents, inspectors and employees of this or any other municipal body or public utility which may have granted permits in connection with the work. An original policy made out to the Owner shall be provided.

9. Additional Insurance. The Contractor shall have in effect and maintain at his own expense such additional insurance policies as are required by the various public agencies, railroad companies, utility companies, etc. that have jurisdiction over or adjacent to the construction site. Flood insurance for facilities above ground with a value of $50,000 or more shall also be provided in the amount equal to the full insurable value for facilities construction within the 100 year floodplain.

10. Refer to the Specific Contract Conditions of these Specifications for any special insurance requirements.

C. <u>Certificates of Insurance:</u>

1. Certificate Holder shall be "County of Erie, 95 Franklin Street, Room 1034, Buffalo, New York 14202."

2. Coverage must comply with all Specifications of the Contract.

3. Certificates shall be executed by an insurance company and/or agency or broker which is licensed by the Insurance Department of the State of New York. If executed by a broker, notarized copy of authorization to bind or certify coverage must be attached.

4. All policies in which the County of Erie is named as an additional insured shall provide that:

   "The insurance company or companies issuing the policies shall have no recourse against the County of Erie for payment of any premiums or for assessments under any form of policy."

   "The insurance shall apply separately to each insured (except with respect to the limit of liability)."

5. All Certificate of Insurance shall be on the County of Erie Standard Insurance Certificate as shown on Page GCC-60 of the Specifications. Four (4) original copies of the Certificate of Insurance with original signatures shall be submitted to the County of Erie, Department of Environment and Planning, Division of Sewerage Management, 95 Franklin Street, Rm. 1034, Buffalo, New York 14202, within 15 calendar days after the notice of an award. Other Certificates of Insurance may be used with prior approval of the County of Erie Department of Law provided the Certificates contain the following language verbatim:

   a. "Acknowledgement: Insurance companies providing these coverages acknowledge that the named insured is entering into a contract with the County of Erie, in which the named insured agrees to defend, hold harmless and indemnify the County, its officials, employees, volunteers and those other entities named as additionally insured (Ref. General Contract Conditions Item 106) against all claims resulting from work performed, material handled and services rendered. The contractual liability coverage evidenced above covers the liability assumed under the County-Contract Agreement."

   b. "Prior to non-renewal or cancellation of these policies, the Contractor and their Insurance Carrier shall provide advance written notice to the County of Erie Department of Law and the Erie County Division of Sewerage Management, before such change shall be effective."

D. The following items are to be submitted to the Owner within 15 calendar days after notice of award:

1. Four (4) original Certificates of Insurance, signed and dated.

2. One (1) certified copy of the Builders Risk Policy (written cancellation clause).

3. One (1) certificate of Workers' Compensation

4. One (1) original policy of the Owners Contractors Protective Liability Insurance (written cancellation clause).

5. Four (4) original Performance Bonds.

6. Four (4) original Labor and Material Payment Bond.

County of Erie Standard Insurance Certificate

THIS CERTIFICATE IS ISSUED AS A MATTER OF INFORMATION ONLY AND CONFERS NO RIGHTS UPON THE CERTIFICATE HOLDER. THIS CERTIFICATE DOES NOT AFFIRMATIVELY OR NEGATIVELY AMEND, EXTEND OR ALTER THE COVERAGE AFFORDED BY THE POLICIES BELOW. THIS CERTIFICATE OF INSURANCE DOES NOT CONSTITUTE A CONTRACT BETWEEN THE ISSUING INSURER(S), AUTHORIZED REPRESENTATIVE OR PRODUCER, AND THE CERTIFICATE HOLDER.

IMPORTANT: If the certificate holder is an ADDITIONAL INSURED, the policy(ies) must be endorsed. If SUBROGATION IS WAIVED, subject to the terms and conditions of the policy, certain policies may require an endorsement. A statement on this certificate does not confer rights to the certificate holder in lieu of such endorsement(s).

PRODUCER	CONTACT NAME	
	PHONE (A/C No. Ext)	FAX A/C No.
	EMAIL ADDRESS	
	PRODUCER CUSTOMER ID #	

INSURED	INSURER(S) AFFORDING COVERAGE	NAIC #
	INSURER A:	
	INSURER B:	
	INSURER C:	
	INSURER D:	
	INSURER E:	
	INSURER F:	

COVERAGES **CERTIFICATE NUMBER:** **REVISION NUMBER:**

THIS IS TO CERTIFY THAT THE POLICIES OF INSURANCE LISTED BELOW HAVE BEEN ISSUED TO T E INSURED NAMED ABOVE FOR THE POLICY PERIOD INDICATED. NOTWITHSTANDING ANY REQUIREMENT, TERM OR CONDITION OF ANY CONTRACT OR OTHER DOCUMENT WITH RESPECT TO WHICH THIS CERTIFICATE MAY BE ISSUED OR MAY PERTAIN, THE INSURANCE AFFORDED BY T E POLICIES DESCRIBED HEREIN IS SUBJECT TO ALL THE TERMS, EXCLUSIONS AND CONDITIONS OF SUCH POLICIES. LIMITS SHOWN MAY HAVE BEEN REDUCED BY PAID CLAIMS.

INSR LTR	TYPE OF INSURANCE	ADDL INSR	SUBR WVD	POLICY NUMBER	POLICY EFF (MM/DD/YYYY)	POLICY EXP MM/DD/YYYY)	LIMITS	
	GENERAL LIABILITY						EACH OCCURRENCE	$
	☐ COMMERCIAL GENERAL LIABILITY						DAMAGE TO RENTED PREMISES (Ea occurrence)	$
	☐ CLAIMS-MADE ☐ OCCUR						MED EXP (Any one person)	$
							PERSONAL & ADV INJURY	$
							GENERAL AGGREGATE	$
	GEN'L AGGREGATE LIMIT APPLIES PER						PRODUCTS COMP/OP AGG	$
	☐ POLICY ☐ PRO-JECT ☐ LOC							$
	AUTOMOBILE LIABILITY						COMBINED SINGLE LIMIT (Ea accident)	$
	☐ ANY AUTO						BODILY INJURY (Per person)	$
	☐ ALL OWNED AUTOS						BODILY INJURY (Per accident)	$
	☐ SCHEDULED AUTOS						PROPERTY DAMAGE (Per accident)	$
	☐ HIRED AUTOS							$
	☐ NON-OWNED AUTOS							$
	☐ UMBRELLA LIAB ☐ OCCUR						EACH OCCURRENCE	$
	☐ EXCESS LIAB ☐ CLAIMS-MADE						AGGREGATE	$
	☐ DEDUCTIBLE							$
	☐ RETENTION $							$
	WORKERS COMPENSATION AND EMPLOYERS' LIABILITY						☐ WC STATU TORY LIMITS- ☐ OTH ER-	$
	ANY PROPRIETOR/PARTNER/EXECUTIVE OFFICE/MEMBER EXCLUDED? (Mandatory in NH) Y/N ☐	N/A					E L EACH ACCIDENT	$
	If yes describe under DESCRIPTION OF OPERATIONS below						E L DISEASE - EA EMPLOYEE	$
							E L DISEASE - POLICY LIMIT	$

DESCRIPTION OF OPERATIONS / LOCATIONS / VEHICLES (Attach ACORD 101, Additional Remarks Schedule, if more space is required)

CERTIFICATE HOLDER

County of Erie
95 Franklin St
Buffalo NY, 14202

CANCELLATION

SHOULD ANY OF THE ABOVE DESCRIBED POLICIES BE CANCELLED BEFORE THE EXPIRATION DATE THEREOF, NOTICE WILL BE DELIVERED IN ACCORDANCE WITH THE POLICY PROVISIONS.

AUTHORIZED REPRESENTATIVE

X. FOR COUNTY USE ONLY:

Name of County Dept. Requesting Certificate	Dept.Env.& Plan.- Div Sewerage Management
Purchase Order or Contact Number	ESCD No. Contract
Vendor Insurance Classification	"A"

(Rev 3/11)

INSTRUCTIONS FOR COUNTY OF ERIE STANDARD INSURANCE CERTIFICATE

Insurance shall be procured and certificates delivered before commencement of work or delivery of merchandise or equipment

II. CERTIFICATES OF INSURANCE

A. Shall be made to the "County of Erie, 95 Franklin St, Buffalo NY, 14202"

B. Coverage must comply with all specifications of the contract

C. Must be executed by an insurance company, agency or broker, which is licensed by the Insurance Department of the State of New York. If executed by a broker, notarized copy of authorization to bind or certify coverage must be attached

III. Forward the completed certificate to: County of Erie (Department or Division) responsible for entering into the agreement for construction, purchase, lease or service.

IV. Minimum coverage with limits are as follows.

Vendor Classification	A Construction and Maintenance	B Purchase or Lease of Merchandise or Equipment	C Professional Services	D Property Leased To Others Or Use Of Facilities Or Grounds	E Concession-aires Services	F Livery Services	G All Purposes Public Entity Contracts
Commercial Gen. Liab	$1,000,000 per occ	$1,000,000 CSL	$1,000,000 CSL	$1,000,000	$1,000,000 CSL	$1,000,000	$1,000,000 CSL
General Aggregate	$2,000,000	$2,000,000	$2,000,000	$2,000,000	$2,000,000	$2,000,000	$2,000,000
Products Completed Operations Liability	$2,000,000	$2,000,000	$2,000,000	$2,000,000	$2,000,000	$2,000,000	$2,000,000
Blanket Broad Form Contractual Liability	INCLUDE						
Contractual Liability		INCLUDE	INCLUDE	INCLUDE	INCLUDE	INCLUDE	INCLUDE
Broad Form P.D.	INCLUDE						
X.C.U. (explosion, collapse Underground)	INCLUDE						
Liquor Law				INCLUDE	INCLUDE		
Auto Liab	$1,000,000 CSL		$1,000,000 CSL	$1,000,000 CSL	$1,000,000 CSL	$1,000,000 CSL	$1,000,000 CSL
Owned	INCLUDE		INCLUDE	INCLUDE	INCLUDE	INCLUDE	INCLUDE
Hired	INCLUDE		INCLUDE	INCLUDE	INCLUDE	INCLUDE	INCLUDE
Non Owned	INCLUDE		INCLUDE	INCLUDE	INCLUDE	INCLUDE	INCLUDE
Excess/Umbrella Liab.	$5,000,000	$1,000,000	$1,000,000	$1,000,000	$1,000,000	$5,000,000	$1,000,000
Worker's Compensation	STATUTORY	STATUTORY	STATUTORY	STATUTORY	STATUTORY	STATUTORY	STATUTORY
& Employer's Liability							
Disability Benefits	STATUTORY	STATUTORY	STATUTORY	STATUTORY	STATUTORY	STATUTORY	STATUTORY
Professional Liability			$5,000,000				
Erie County, To Be Named Add'l Insd	Gen. Liab., Auto Liab., & Excess	Broad Form Vendors May Be Required	Gen. Liab., Auto Liab., & Excess	Gen. Liab., Auto Liab., & Excess	Gen. Liab., Auto Liab., & Excess	Gen. Liab., Auto Liab., & Excess	Gen. Liab., Auto Liab., & Excess

V. Construction contracts require excess Umbrella Liability limits of $5,000,000.

VI. Coverage must be provided on a primary-non contributory bases

VII. Designated Construction Project General Aggregate Limit Per Project Endorsement CG 25 03 is required.

VIII. In the event the concessionaire is required to have a N.Y.S. license to dispense alcoholic beverages an endorsement for liquor liability is required

IX. Waiver of Subrogation: Required on all lines unless noted

Transportation of people in buses, vans or station wagons requires $5,000,000 excess liability.

XI. Workers Compensation, State Workers' Compensation / Disability Benefits Law

Use Applicable Certificates Below.

Workers Compensation Forms

CE-200	Exemption
C105.2	Commercial Insurer
SI-12	Self Insurer
GSI-105.2	Group Self Insured
U-26.3	New York State Insurance Fund

DBL (Disability Benefits Law) Forms

CE-200	Exemption
DB-120.1	Insurers
DB-155	Self Insured

XII. The "ACORD" form certificate may be used in place of the County of Erie Standard Insurance Certificate, provided that all of the above referenced requirements are incorporated into the "ACORD" form certificate.

Edition Date: 7/23/2012

105. OWNER'S LIABILITY INSURANCE

For the duration of this Contract, until final payment and at all times the Contractor may be correcting, removing or replacing defective work, the Contractor shall maintain insurance in the name of the Owner for the same limits of liability and containing the same specific endorsements which the Contractor places on the insurance required in Paragraph 104. This insurance shall conform to the requirements and restrictions imposed by Paragraph 104. Original and one certified copy of the policy shall be filed with the Owner, showing the County of Erie as additionally insured.

106. INDEMNITY, DEFENSE OF ACTIONS OR SUITS

The Contractor shall indemnify and hold harmless the Owner and the Engineer and their agents and employees from and against all claims, damage, losses and expenses including attorneys' fees that shall or may happen to the said work or to any part or parts thereof, or to any materials, building, equipment or other property that may be used or employed therein, or placed upon the ground, during the progress of the work, arising out of or resulting from the performance of the work, provided that any such claim, damage, loss or expense (1) is attributable to bodily injury, sickness, disease or death, or to injury to or destruction of tangible property (other than the Work itself) including the loss of use resulting therefrom, and (b) is caused in whole or in part by any negligent act or omission of the Contractor, and subcontractor, anyone directly or indirectly employed by any of them or anyone for whose acts any of them may be liable, regardless of whether or not it is caused in part by a party indemnified hereunder, nor shall the Owner be in any manner answerable or responsible for any injury done or damages or compensation required to be paid under any present or further law, to any person or persons whatever, whether employees of the Contractor or otherwise, or for damage to any property, whether belonging to the owner or to others occurring during or resulting from the said work. The Contractor also agrees that he will properly guard against all such injuries, damages and compensation. The Contractor also agrees that he shall at all times indemnify and save harmless the Owner, its officers and agents against all such injuries, damages and compensation arising or resulting from causes other than its neglect.

The Contractor will, at his own expense, defend, indemnify and save harmless, and make good any damage and/or physical injuries that shall be in the course of the work and construction under this Contract be done or caused to any adjacent, abutting, or overhead property, which shall include, but shall not be limited to lands, foundations, walls, buildings (abutting, under or overhead) and structures of all kinds, lessees, operators or occupants of any buildings and/or structures.

107. MUTUAL RESPONSIBILITY OF CONTRACTORS

If, through acts of neglect on the part of the Contractor, any other Contractor, or any subcontractor shall suffer loss or damage on work, the contractor agrees to settle with such other Contractor or subcontractor by agreement or arbitration, if such other Contractor or subcontractor will so settle. If such other Contractor or subcontractor shall assert any claim against the Owner on account of any damage alleged to have been so sustained, the Owner shall

notify the Contractor, who shall indemnify and save harmless the Owner against any such claims.

108. ENGINEER'S AND OWNER'S CONTROL SHALL NOT LIMIT CONTRACTOR'S RESPONSIBILITY OR RISK

The Contractor shall be solely, completely and continuously responsible, during the performance of this Contract, including such periods during which actual work may not be in process such as normal nonworking hours, holidays, Saturdays and Sundays, strikes, for the conditions of the job site, which responsibility shall include the means, methods, techniques, sequences, or procedures or construction and safety, directly or indirectly, of all persons and property involved in, related to or entering into or in the proximity of said job site whether or not such involvement, relation of entry is for performance of work or provision of services under this Contract and shall be held liable for any bodily injury, death or property damage arising, due to job site conditions, out of or contingent to the performance of all work under this Contract.

The Contractor shall take all necessary precautions to prevent the same. Neither the completion of the work nor the final payment therefore shall discharge the Contractor from his responsibility for any claims from injury to persons or property which may have arisen during the work.

The requirement herein included in Paragraph 18 of the General Contract Conditions that al work shall be subject to the control of the Engineer shall not be construed as requiring that the Engineer or Owner be responsible, in any way, for the adequacy or inadequacy of any action taken or not taken by the Contractor which affects or might affect the safety of any individual or property, either directly or indirectly, during the performance of this Contract and the Engineer shall be held blameless and shall accrue no liability for any bodily injury, death or property damage arising out of or contingent to the performance of all work under this Contract.

109. WORK IN THE VICINITY OF WATER BODIES

A. Standards of Performance

All work in the vicinity of water bodies shall meet the following minimum standards:

1. Work shall not obstruct the upstream and downstream movement of fish. Temporary culverts shall be as nearly as possible, flush with the stream bed.

2. Sufficient flow of water shall be maintained at all times to sustain aquatic life downstream.

3. Any temporary culvert of diversion channel shall provide a "V" or "dish-shaped" channel, to concentrate flow during periods of low water and facilitates the movement of fish.

4. Disturbance of the stream bed shall be kept to an absolute minimum and the stream bed shall be returned, as nearly as possible, to its original condition, or better. (Where possible, in modifying a stream bed, the centerline shall be 8" to 12" lower than the toe of the channel bank, to concentrate the flow water.)

5. Where work necessitates disturbing banks, they shall be returned to original condition, or as shown on the Drawings. All tree and brush removal shall be kept to a minimum.

6. Any dike or cofferdam required to facilitate construction shall be erected in such a manner that stream flow will not be sufficiently reduced to endanger fish life downstream and such dike or cofferdam shall be erected of materials that will not contribute substantially to the turbidity or siltation of the stream.

7. During the project, care shall be taken to prevent or reduce to a minimum any damage to the stream from pollution by debris, sediment, of other material or from the manipulation of equipment and/or materials in or near such streams. Water that has been used for washing or processing or that contains oils and sediments that will reduce the quality of water in the stream shall not be directly returned to the stream. Such waters will be diverted through a settling basin, or filter before going into the stream.

8. If water is taken from a stream for construction purposes and an impounding structure is necessary, such structure shall be erected in a manner causing the least possible disturbance to the stream.

B. Permits

1. The Owner has made application for necessary stream crossing permits required for this Contract. These permits will be issued to the Contractor who is awarded this Contract upon submission of satisfactory methods and timetable for construction of the stream crossings, and to insure compliance with the above standards.

2. For stream crossings not requiring permits, compliance with the above standards, to the extent applicable, will be required for stream crossings and work adjacent to water bodies in this Contract.

C. Restrictions on Construction

The following restrictions shall apply to all stream crossings:

1. Prior to any stream channel relocation, or other work that may affect the character or location of trout or other game fish waters, the Contractor will contact the Regional Supervisor of the New York State Department of Environmental Conservation to determine whether they wish to remove the fish or perform any other work. If any fish salvage or other protective measures are deemed necessary, the Contractor will cooperate with and coordinate his work with the Department of Environmental Conservation.

2. Prior to commencement of stream crossing operations, the Contractor shall submit construction drawings of each stream crossing to the Engineer for his approval. The drawings shall show the following information:

a) Proposed methods of construction
b) Details of sequences of construction
c) Proposed methods for maintaining flows during construction operations
d) Proposed methods for preventing damage to property in the event of sudden or heavy storms

3. The Contractor shall be responsible for the preservation of all stream banks within and adjacent to the limits of work.

4. Any stream bank disturbed by the Contractor's operations will be rip-rapped or otherwise protected at the Contractor's expense as ordered by the Engineer.

5. When the top of excavation is within ten (10) feet of the top of any stream bank, the contractor shall provide protection for the stream bank at his own expense and as approved by the Engineer.

6. Additionally, for those streams classified C and D, which will be crossed by a sewer pipeline and/or the banks will be disturbed during the course of construction, the Applicant's project specifications shall contain the following information:

a. Prior to commencing work on the stream crossing and prior to commencing work on the banks of the stream, the construction Contractor shall contact the legal Regional Supervisor of Regulation and inform him of the impending work.

b. The construction Contractor will be advised by the local Regional Supervisor of Regulation of the procedures and conditions required to be following on making the stream crossing and/or working on the banks of the stream.

110. SITE SAFETY

The Contractor agrees to indemnify and hold harmless the Owner and Engineer and any of their officers, directors and employees from any and all claims, suits or judgments based upon damage to property or injury or death to persons arising out of, or connected with the work covered by the contract, regardless how it may be caused.

The Contractor shall provide site specific health and safety and contingency plans. The Contractor's personnel both supervision and workers shall be trained in the proper health/safety procedures. All safety equipment such as harnesses, protective clothing, respiratory, air monitoring, ventilating, etc for activities associated with construction/testing of the improvements shall be provided by the Contractor. The Contractor's methods and equipment shall be in full compliance with OSHA Standards.

The contract documents assign the prime contractor sole responsibility for job safety and required compliance to all Federal, State and Local safety requirements.

111. EXPOSIVES AND BLASTING

Explosives for blasting shall be stored, handled and used in accordance with the laws, ordinances, and regulations of the State of New York and all local regulations. Blasting shall be conducted so as not to endanger persons or property; and unless otherwise permitted, shall be covered or otherwise be satisfactorily confined. The Contractor shall be responsible for and shall make good any damage of whatever nature caused by blasting or accidental explosions.

The Contractor specifically agrees to comply with Sections 760 and 765 inclusive of the General Business Law of the State of New York, as follows:

ARTICLE 36 – CONSTRUCTION AND EXCAVATION

NEAR UNDERGROUND FACILITIES (NEW)

Sec.
760. Definitions
761. Notice requirements
762. Location of underground facilities
763. Duty of excavator
764. Penalties and liability
765. Separability

Section 760. Definitions

When used in this Article, the following terms, unless the context otherwise requires, shall have the following meanings:

1. "Person" means any individual, firm, corporation, association or partnership, cooperative association, joint venture, joint stock association, business trust, their lessees, trustees or receivers, governmental unit or public authority whether or not incorporated.

2. "Excavation" means an operation for the purposes of movement or removal of earth, rock or other materials in or on the ground by use of mechanized equipment or by blasting, and including auguring, backfilling, drilling, grading, plowing in, pulling in, trenching and tunneling; provided, however, that the movement of earth by tools manipulated only by human or animal power and the tilling of soil for agricultural purposes shall not be deemed excavation.

3. "Demolition" means the wrecking, razing, rending, moving or removing of any structure.

4. "Underground facilities" means pipelines, conduits, ducts, cables, wires, manholes, vaults or other such facilities or their attachments, which have been installed underground by an operator to provide his services or materials.

5. "Excavator" means a person who is engaged in a trade or business which includes, as a normal part thereof, the carrying out of excavation or demolition; provided, however, that an individual employed by an excavator, and having no supervisory authority, other than the routine direction of employees, over an excavation or demolition, shall not himself be deemed an excavator for the purposes of this Article.

6. "Operator" means a person who operates an underground facility or facilities to furnish any of the following services or materials; electricity, gases, steam, liquid petroleum products, telephone or telegraph communications, cable television, sewage removal, traffic control systems, or water.

7. "Damage" means an impact upon or removal of support from an underground facility consequent to excavation or demotion which, according to the operating practices of the operator, would necessitate repair of such facility.

8. "Notification system" means any organization among whose purposes is the dissemination to one or more operators of notification of construction activities in a specified area.

9. "Central registry" means the place where a written master list of operators of underground facilities is maintained by the local governing body of a town or city outside the City of New York or by a county within the City of New York for the purpose of providing to excavators a single source of identification of operators of underground facilities in such town, city or county.

Effective Date. L.1974, c.818, Section 6, provided that: "This Act (adding Sections 760 to 765 and repealing Section 322-2, and adding Sections 28-a and 28-b of the Labor Law) shall take effect immediately (June 7, 1974) provided, however, that the provisions of subdivision two of Section seven hundred sixty-one, and Sections seven hundred sixty-two, seven hundred sixty-three, and seven hundred sixty-four of the General Business Law, and Section twenty of the Labor Law as added by this Act, and Section five of this Act (repealing Section 322-a) shall take effect on April First Nineteen Hundred Seventy-Five."

Legislative Findings and Declarations. L.1974, C.818, Section, effective June 7, 1974, provided that: "The Legislature hereby finds and declares that there is a need to protect underground facilities from destruction or damage, in order to prevent death or injury to workers and the pubic, damage to private and public property or loss of essential services to the general public, which need has not been met adequately by existing law. The Legislature accordingly further finds it necessary to provide for appropriate notices to operators of underground facilities by persons proposing to excavate near such facilities or to demolish structures near to or containing such facilities; to provide for appropriate notices to operators when underground facilities are damaged; to provide for and encourage the establishment of "one call" notification

systems wherever feasible; to provide for certain other duties to safeguard life and property; and to prescribed penalties and remedies, including injunctive remedies, for violations of such duties."

Section 761. Notice requirements

1. The local governing bodies of each of the towns or cities outside the City of New York and the counties within the City of New York shall establish a central registry of operators having underground facilities within their respective geographical jurisdiction. Each operator of such underground facilities shall notify, in writing, such central registry when it has such underground facilities within the geographical jurisdiction of such central registry. The central registry shall compile and maintain a master list of such operators as required herein, and shall, on request, furnish excavators, with a copy of such master list. The local governing bodies may charge a fee not to exceed five dollars for each master list of operators furnished.

2. No excavator shall commence or engage in any excavation or demolition unless and until he has served timely notice as provided in this Article to operators who maintain underground facilities in the town or city outside the City of New York, or county within the City of New York in which the excavation or demolition is to take place. Such notice shall be served in accordance with the rules and regulations promulgated by the Board of Standards and Appeals pursuant to Section twenty-eight of the Labor Law.

Added L.1974, c.818, Section 4

Effective Date. Section, except for subd. 2 effective June 7, 1974, and subd. 2 effective April 1, 1975, see note under Section 760.

Rules and Regulations

The New York State Board of Standards and Appeals may promulgate a rule requiring municipalities to publish in the official newspaper a notice to excavators of the establishment of a central registry of operators of underground facilities along with the address and telephone number of such registry. 1975, Op. Atty. Gen. Mar. 13.

Section 762. Location of underground facilities

1. Upon receipt of the notification provided for by this Act and pursuant to the rules and regulations promulgated by the Board of Standards and Appeals pursuant to Section twenty-eight of the Labor Law, an operator shall advise the excavator of those of its underground facilities that will be affected by the proposed excavation or demolition.

2. The operator shall designate the location of its underground facilities in the manner and during the time period set forth in the rules and regulations promulgated by the Board of Standards and Appeals pursuant to Section twenty-eight of the Labor Law.

3. Prior to any excavation of demolition, the excavator shall verify the precise location of the underground facilities in a manner set forth in the rules and regulations promulgated by the Board of Standards and Appeals pursuant to Section twenty-eight of the Labor Law.

L.1974, c.818, Section 4.

Effective Date. Section effective April 1, 1975 see note under Section 760.

Section 763. Duty of excavator

1. An excavator engaged in excavation, or demolition shall provide support to and prevent damage to any underground facility or its protective coating in the means set forth in the rules and regulations promulgated by the Board of Standards and Appeals pursuant to Section twenty-eight of the Labor Law.

2. In the event of damage to an underground facility, the excavator shall immediately notify the operator of the facility and no backfilling shall be done by the excavator until repairs have been made by the operator. In the event of an electrical short or the escape of gas or hazardous fluids endangering life, the excavator shall immediately notify all persons who might be endangered and assist in their evacuation.

Added L.1974, c.818, Section 4.

Effective Date. Section effective April 1, 1975, see note under Section 760.

Section 764. Penalties and liabilities

1. Failure to comply with any provision of this Article shall subject an excavator or an operator to a civil penalty of up to five hundred dollars for the first violation and up to an additional five thousand dollars for each succeeding violation which occurs in connection with the entire self same excavation or demolition activity within a two month period.

2. The penalties provided for by this Article shall not apply to an excavator who damages an underground facility due to the failure of the operator to comply with any of the

provisions of this article nor shall in such instance, the excavator be liable for repairs as prescribed in subdivision seven of this Article.

3. An action to recover a penalty under this Article may be brought in the Supreme Court in the judicial district in which the violation was alleged to have occurred which shall be commenced and prosecuted by the Attorney General. All monies recovered in any such action, together with the costs thereof, shall be paid into the State Treasury to the credit of the general fund.

4. An excavator or an operator who willfully and knowingly causes or participates in a violation of this Article is deemed guilty of a violation, and on conviction thereof is punishable by a fine of not less than one hundred dollars not more than one thousand dollars for each such offense. These penalties are in addition to any civil liability.

5. Nothing in this Act shall impair, limit or reduce the statutory, common law or contractual duties or liability of any excavator excavating or demolishing in the vicinity of underground facilities.

6. Any excavator engaging in or proposing to engage in excavation or demolition in a negligent or unsafe manner, which has resulted in or is likely to result in damage to underground facilities in such a manner that life, property or the continuation of operator service is endangered, may be enjoined from such excavation of demolition or any aspect thereof upon application of the operator owning the facilities or the Attorney General made in Supreme Court having jurisdiction in the County wherein the excavation or demolition or proposed excavation or demolition is to take place. Three or more instances of damage by an excavator to underground facilities in the course of the entire self same excavation or demolition activity shall be prima facie grounds for enjoining the excavator from further performance of the excavation or demolition activity.

7. In the event that, as a result of a violation of any of the provisions of this Article by an excavator, it is necessary that an operator make any repair to or provide new support to an underground facility, the excavator shall be liable to the operator for reasonable costs to incurred.

Added L.1974, c.818, Section 4

Effective Date. Section effective April 1, 1975, see note under Section 760.

Section 765. Separability

If any provision of this Article or the application thereof to ay person or circumstances is held invalid, the remainder of the Article and the application of such provision to other persons or circumstances shall not be affected thereby.

Added L.1974, c.818, Section 4.

Effective Date. Section effective June 7, 1974, see note under Section 760.

112. OSHA REQUIREMENTS FOR SHORING OF TRENCH EXCAVATIONS

The Contractor shall comply fully with OSHA 29 CFR Parts 1926, Subpart P, as it may be amended, and with the following Memoranda as issued by Louis L. Levine, Industrial Commissioner of the State of New York Department of Labor. In cases where the standards may overlap, the more stringent procedure will govern.

TO: Construction Employers in New York State
RE: Requirements for Shoring of Trench Excavations
DATE: December 8, 1971

"In the past few years, accidents involving the collapse of unshored sides of excavations such as trenches for water and sewer lines have caused serious injuries or death. The increasing frequency of this type of accident points up the need for increased emphasis to be placed on the problem by the construction industry.

Industrial Code Rule 2/3, which contains standards for the safety of construction and demolition employees, specifies detailed requirements for shoring and sheeting of trenches and similar excavations. This rule, which is promulgated by the Board of Standards and Appeals, requires shoring, sheeting or equivalent protection for an employee working in any excavation which has a bank or side more than five feet high above his footing (see Section 23.8).

The U.S. Department of Labor has also promulgated Safety and Health Regulations for Construction pursuant to the 1970 Occupational Safety and Health Action (OSHA). The standards were published in the Federal Register of April 17, 1981. Section 1518.652, General Trenching Requirements, requires that sides of trenches in unstable or soft material, four feet or more in depth shall be shored, sheeted, braced, sloped or otherwise supported by means of sufficient strength to protect employees working within them.

Under an Interim Agreement with the U.S. Department of Labor executed pursuant to Section 18(h) of OSHA, construction employers are required to comply with the most stringent rule or standard due to dual or concurrent State-Federal jurisdiction. In the case of trench shoring, the Federal rule is more stringent and must be followed. It is important to note also that under Section 17(e) of OSHA, a willful violation of any standard, rule or order promulgated pursuant to the Act causing death to any employee, shall, upon conviction, be punished by a fine or not more than $10,000 or by imprisonment for not more than six moths or by both.

It is the position of the Department of Labor that employers should be kept advised of both Federal and State laws and regulations dealing with of occupational health and safety, in particular, during the life of the Interim Section 18(h) Agreement.

If a plan is submitted by the State to the U.S. Department of Labor to assume permanent and exclusive responsibility for construction safety standards and enforcement pursuant to Section 18(b) of OSHA, it is more than likely that the Board of Standards and Appeals will be required to amend Code Rule 23 requirements for trench shoring to be as effective as the Federal standards.

For further information on this subject, please contact my office or the Board of Standards and Appeals.

/s/ Louis L. Levine
Industrial Commissioner"

TO: Construction Employers in New York State
RE: Amended U.S. Department of Labor (OSHA)
Trench Shoring Standards
DATE: March 29, 1972

"On December 8, 1971, I issued a memorandum to New York State construction employers spelling out differences in State and Federal (OSHA) requirements for shoring of trench excavations under existing dual State-Federal jurisdiction.

As a result of a proceeding to amend the OSHA construction standard regarding trench shoring, published in the Federal Register on September 28, 1971, George C. Guenther, Assistant Secretary of Labor, received comments indicating that difficulties and hardships were imposed on the construction industry by the requirement to shore shallow trenches less than five feet in depth. After viewing the arguments and data, the Secretary of Labor issued an amended standard for trench shoring, which requires shoring to begin at a depth of five rather than four feet. The standard, as amended, was published in the Federal Register of February 17, 1972 (see Parts 1926.651 and 1926.652) and will be effective on March 17, 1972.

The Chairman of the Board of Standards and Appeals, Harry R. Mason, has advised me that the Board will substantially follow the amended Federal trench shoring standards in the amendment of Code Rule 23, the construction code, which is in the final stages of adoption. Existing Rule 23 requires trench shoring at a five foot depth. It is expected that he amended Rule 23 will be effective May 1, 1972, and will be available about April 1, 1972.

I bring these comments to your attention to assist you in becoming aware of the revisions in the Secretary's requirements. However, I wish to stress the point I made in my earlier memorandum: the increasing frequency of accidents resulting form the collapse of unshored sides of excavation underscores the need for increased emphasis, by the construction industry, on practices that eliminate circumstances leading to serious and fatal accidents.

If you desire any further information on this subject, please contact my office or the Board of Standards and Appeals.

/s/ Louis L. Levine
Industrial Commissioner"

113. OSHA REQUIREMENTS FOR CONFINED SPACE ENTRY

The Contractor specifically agrees to comply fully with the rules and regulations as stated in OSHA 29 CFR, Parts 1910, a it may be amended. The Contractor will establish and implement a Confined Space Program which will adhere fully with the requirements. The Contractor will be solely responsible for his established Confined Space Program and the coordination of such with his subcontractors. Where there is more than one Prime Contractor on a project, each Prime Contractor will be required to coordinate entry operations with the other Contractors when the employees of more than one contractor are working simultaneously within a Confined Space Area.

If the Owner should question a method utilized in the Contractor's Confined Space Program, the Contractor will be required to obtain a written response from OSHA which will determine if the procedure does or does not satisfy the requirements of OSHA 29 CFR Parts 1910. Failure by the Contractor to undertake the necessary steps to produce a written response from OSHA will delay the processing of the monthly payment estimate(s).

The Contractor shall complete the Confined Space Program Certification in the Proposal section when submitting their bid, certifying that the Contractor has established a Confined Space Program which conforms to OSHA 29 CFR Part 1910 and that full implementation of the Contractor's Confined Space Program is a requirement of this Contract.

114. FIELD QUALITY CONTROL

Where so designated in the Specifications for equipment items, the manufacturer or supplier will furnish the services of experienced and appropriate personnel to perform the following:

A. Field supervision during installation or inspection upon completion of installation. The manufacturer shall then file in quadruplicate with the Engineer, a certificate on the manufacturer's stationary stating that the equipment has been properly installed in accordance with the manufacturer's recommendations and that the trial operation has been satisfactory. The amount of time and the number of mandays shall be sufficient to accomplish the work as required dependent upon the type of equipment or system.

B. Equipment start-up and operating/maintenance instruction to the Chief Operator of the plant, in conjunction with plant start-up. The amount of time and the number of mandays shall be sufficient to accomplish the work as required dependent upon the type of equipment or system.

C. Follow-up assistance on maintenance and operation to assure that the Chief Operator of the plant or his designated party properly understands the required maintenance. This work is to be performed between 2 months and 6 months after the equipment or system has been accepted by the Owner and shall all be for 1 trip or 1 day minimum.

115. CROSS WITHHOLDING PROVISION

THE OWNER RESERVES THE RIGHT TO WITHHOLD MONEY FROM THE CONTRACTOR ON THIS CONTRACT FOR WORK NOT PERFORMED BY THE CONTRACTOR ON OTHER OUTSTANDING CONTRACTS WITH THE OWNER.

116. CONSTRUCTION SITE SAFETY

The Contractor is solely responsible for all site safety. The Contractor's equipment and methods of operation shall be in full compliance with OSHA Standards and satisfy all Federal, State and Local Health and Safety Regulations. The Contractor will be solely responsible for his safety program and the coordination of such with his employees and subcontractors.

SPECIFIC CONTRACT CONDITIONS

GENERAL

The following paragraphs in the Specific Contract Conditions add to, modify, delete or in other ways alter the provisions of the General Contract Conditions. All paragraphs in the Specific Contract Conditions numbered between 1 and 116 relate to the corresponding paragraph in General Contract Conditions.

9. QUANTITIES AND AMOUNTS OF WORK

Replace Item No. 9 of the General Contract Conditions with the following:

"Work under this Contract shall be completed at the assigned unit price listed for each of the Scheduled Payment Items proposed by the Contractor, and shall constitute full compensation for all work completed under the Contract. Work under this Contract shall be ordered by an authorized written Work Order. There is no guarantee as to the quantity of work to be performed under this contract.

The Owner reserves the right to delete or add to such amounts or items of work from this Contract as may be necessary to finance the project from available funds.

The work included under each bid item is described in the Detailed Specifications. The quality of workmanship and materials entering into the work shall conform to the requirements of the pertinent provisions and sections of these Specifications."

11. CONTRACT DRAWINGS AND SPECIFICATIONS

Replace Item No. 11 of the General Contract Conditions with the following:

"After the Contract has been executed, the Contractor will be furnished free of cost up to five (5) sets of the Contract Documents. Additional copies of the Contract Documents, if available, will be furnished to the Contractor at the cost of reproduction.

The Contractor shall furnish each of his/her subcontractors, manufacturers and material persons, such copies of the Contract Documents as may be required for his/her work.

Two hard copies and one digital copy of each authorized written Work Order showing the full extent of the work will be provided to the Contractor after execution."

12. CHECKING PLANS

Replace Item No. 12 of the General Contract Conditions with the following:

"All figures and dimensions on the authorized written Work Orders shall be carefully checked by the Contractor, who shall note all discrepancies. The Contractor will be held responsible for any errors not discovered before the work has been executed. In case errors are found, these shall be immediately reported to the Engineer who will instruct the Contractor as to the method of correcting them. The Contractor shall not alter Specifications, Drawings, or figures, nor make any alternations in or additions to the quantity, character or arrangements of the materials or work, whether same shall involve additional expense or not, unless same shall be agreed upon first, in writing, as provided for herein; this provision, however, shall not abridge in any way the Engineer's rights as to the interpretation of the Specifications, Plans and figures thereon. The Contract Documents and authorized written Work Orders are complementary and what is called for by either shall be as binding as if called for by both. In all cases figures dimensions shall take precedence over scaled dimensions, and the larger scale details shall take precedence over smaller scale drawings."

13. PLANS AND SPECIFICATIONS: INTERPRETATIONS

Replace Item No. 13 of the General Contract Conditions with the following:

"The Contractor shall keep at the site of the work, one (1) copy of the Contract Documents and applicable written Work Orders, signed and identified by the Engineer, and shall at all times give the Engineer and other representatives of the Owner access thereto.

Anything shown on the authorized written Work Order and not mentioned in the Specifications, or mentioned in the Specifications and not shown on the authorized written Work Order, have the same effect as if shown or mentioned, respectively, in both. In case of any conflict or inconsistency between the Work Order and Specifications, the Specifications shall govern. Any discrepancy between the Specifications and Work Order shall be submitted by the Contractor to the Engineer. The Engineer shall in all cases determine the amount of quantity of the several kinds of work and the quality of materials which are to be paid for under this Contract; he/she shall determine all questions in relation to the work and the construction thereof, and in all case decide every question which may arise relative to the performance of the work covered by this Contract on the part of the Contractor. Any doubt as to the meaning of these Contract Documents and Work Orders, or any obscurity as to the wording of them, will be explained by the Engineer and all directions and explanations requisite or necessary to complete, explain or make definite any of the provisions of these Contract Documents and give them due effect, will be given by the Engineer, in writing.

The Engineer will, within a reasonable time after presentation to him/her, make decisions, in writing, on all matters relating to the interpretation of the Contract Documents."

15. RECORD DRAWINGS

Delete this section from the contract requirements.

63. FIELD OFFICES

Delete Item No. 63 of the General Contract Conditions in its entirety.

64. PROJECT SIGN

Delete Item No. 64 of the General Contract Conditions in its entirety.

78. CONSTRUCTION SCHEDULE

Replace Item No. 78 of the General Contract Conditions with the following:

"Upon receipt of a Work Order, the Contractor on the project shall submit to the Engineer for review his/her own proposed construction schedule showing the estimated date of starting and completing each stage of the work. If so required by the Engineer, the schedule shall be revised.

The Contractor shall adhere to the reviewed work schedule. In the event a Contractor does not adhere to his/her work schedule and causes damages, the Contractor causing the delay shall save the Owner and Engineer harmless from all actions and charges of the other Contractors against the Owner or Engineer caused by said delay. The Engineer shall make such changes in the construction schedule as he/she may deem necessary.

Any additional engineering services required due to failure to complete the work according to schedule and within the time of completion allowed or required overtime to make up lost time, will be paid by the Contractor as stated in Paragraph 36 ADDITIONAL ENGINEERING SERVICES of the General Contract Conditions.

Failure to progress the work in accordance with the schedule submitted and accepted by the Engineer may at the discretion of the Engineer be construed as a failure to comply with the terms of the Contract and the owner may thereupon cancel the Contract in accordance with Paragraph 100 of the General Contract Conditions. "

89. SURETY BONDS

Replace Item No. 89 of the General Contract Conditions with the following:

"The Contractor shall furnish and pay for surety bonds each in the amount at least equal to $500,000 as security for the faithful performance of the Contract and for the payment to all

persons performing labor and furnishing materials in connection with the Contract. The surety shall be in such form or forms as the Owner may prescribe and with such sureties as he may approve."

SECTION 01010 – WORK UNDER THIS CONTRACT

PART I – GENERAL DESCRIPTION OF WORK

1.01 LOCATION OF WORK

A. The contract is located in Erie County, New York in Erie County Sewer District Nos. 1, 2, 3, 4, 5, 6, and 8. All work shall be performed within existing easements and public highway right-of ways.

1.02 SCOPE OF WORK

A. The work includes performing open cut excavation sewer spot repairs and associated/appurtenant services for existing 8-inch through 42-inch diameter gravity sewer lines; existing 8-inch through 18" force main sewers; re-establishment of all active lateral connections; bypass pumping of existing sewer flows; video inspections post-repair; maintenance and protection of traffic; all necessary restoration and all other related work as indicated in the Contract Documents and Specifications.

B. Quantities provided in the Proposal section are anticipated quantities for the purpose of determining a low bidder only. Actual quantities assigned will be based on need as issues arise. Work will be conducted on an assigned Work Order basis over the term of this Contract as described in the following section.

C. All pavement replacement shall be performed in accordance with the requirements of the State, County and/or Town Highway Departments or other agency having jurisdiction over the highway.

D. All written permits required by the State, County and/or Town Highway Departments to perform the work will be obtained prior to the start of work and paid for by the Contractor. At the completion of the Work Order, the Contractor will be responsible to present the Owner a written letter of compliance from the various governing agencies as to the work done satisfactorily.

E. If there is any variance between the provisions of the permits and the specifications, the provisions of the permit shall supersede those in the specifications.

1.03 WORK ORDERS

A. Individual work orders will be issued for each repair. Each Work Order will include a description of the location, scope of work, and estimated cost based on bid unit prices.

B. The Contractor shall mobilize and begin work within five (5) business days of the notice to proceed date stated in the Work Order.

C. In the event that an emergency is declared, the Contractor shall mobilize and begin work within 4 hours, and payment for emergency mobilization will be paid under Bid Item No. 26B.

D. If the completion date of the Work Order extends beyond the time of this Contract, the terms of this Contract shall be extended to the completion of the Work Order.

PART II – PRODUCTS

PART III – EXECUTION

3.01 GENERAL

A. The Contractor shall furnish all labor, equipment and materials and shall do all work as shown on the Work Orders and as described in the Contract Documents, as specified, and as directed by the Engineer, tested in place and ready for use, in accordance with the obvious and expressed intent of the Contract to secure a complete installation. In general, the work to be performed under each Bid Item is described in the following sections.

B. The quality of workmanship and materials entering into the work shall conform to the requirements of the pertinent sections, clauses, paragraphs and sentences, both directly and indirectly applicable thereto, in these Specifications, whether or not direct reference to such occurs in the Bid Items.

C. All items hereinafter listed in the Descriptions of Bid Items are described in detail in other Sections of these Specifications.

SECTION 01020 – DESCRIPTION OF BID ITEMS

PART I – BID ITEM NO. 1 – GRAVITY SEWER OPEN CUT REPAIR

BID ITEM NO. 1A –	8-12" DIA. SEWER PIPE INSTALL ≥ 10 LF & < 100 LF (<8' DEPTH)
BID ITEM NO. 1B –	8-12" DIA. SEWER PIPE INSTALL ≥ 10 LF & < 100 LF (8.01' – 12' DEPTH)
BID ITEM NO. 1C –	8-12" DIA. SEWER PIPE INSTALL ≥ 10 LF & < 100 LF (12.01' – 16' DEPTH)
BID ITEM NO. 1D –	8-12" DIA. SEWER PIPE INSTALL ≥ 10 LF & < 100 LF (16.01' – 20' DEPTH)
BID ITEM NO. 1E –	>12-24" DIA. SEWER PIPE INSTALL ≥ 10 LF & < 100 LF (<8' DEPTH)
BID ITEM NO. 1F –	>12-24" DIA. SEWER PIPE INSTALL ≥ 10 LF & < 100 LF (8.01' – 12' DEPTH)
BID ITEM NO. 1G –	>12-24" DIA. SEWER PIPE INSTALL ≥ 10 LF & < 100 LF (12.01' – 16' DEPTH)
BID ITEM NO. 1H –	>12-24" DIA. SEWER PIPE INSTALL ≥ 10 LF & < 100 LF (16.01' – 20' DEPTH)
BID ITEM NO. 1I –	>24-42" DIA. SEWER PIPE INSTALL ≥ 10 LF & < 100 LF (<8' DEPTH)
BID ITEM NO. 1J –	>24-42" DIA. SEWER PIPE INSTALL ≥ 10 LF & < 100 LF (8.01' – 12' DEPTH)
BID ITEM NO. 1K –	>24-42" DIA. SEWER PIPE INSTALL ≥ 10 LF & < 100 LF (12.01' – 16' DEPTH)
BID ITEM NO. 1L –	>24-42" DIA. SEWER PIPE INSTALL ≥ 10 LF & < 100 LF (16.01' – 20' DEPTH)
BID ITEM NO. 1M –	8-12" DIA. SEWER PIPE INSTALL > 100 LF (<8' DEPTH)
BID ITEM NO. 1N –	8-12" DIA. SEWER PIPE INSTALL > 100 LF (8.01' – 12' DEPTH)
BID ITEM NO. 1O –	8-12" DIA. SEWER PIPE INSTALL > 100 LF (12.01' – 16' DEPTH)
BID ITEM NO. 1P –	8-12" DIA. SEWER PIPE INSTALL > 100 LF (16.01' – 20' DEPTH)
BID ITEM NO. 1Q –	>12-24" DIA. SEWER PIPE INSTALL > 100 LF (<8' DEPTH)
BID ITEM NO. 1R –	>12-24" DIA. SEWER PIPE INSTALL > 100 LF (8.01' – 12' DEPTH)
BID ITEM NO. 1S –	>12-24" DIA. SEWER PIPE INSTALL > 100 LF (12.01' – 16' DEPTH)
BID ITEM NO. 1T –	>12-24" DIA. SEWER PIPE INSTALL > 100 LF (16.01' – 20' DEPTH)
BID ITEM NO. 1U –	>24-42" DIA. SEWER PIPE INSTALL > 100 LF (<8' DEPTH)
BID ITEM NO. 1V–	>24-42" DIA. SEWER PIPE INSTALL > 100 LF (8.01' – 12' DEPTH)
BID ITEM NO. 1W –	>24-42" DIA. SEWER PIPE INSTALL > 100 LF (12.01' – 16' DEPTH)
BID ITEM NO. 1X –	>24-42" DIA. SEWER PIPE INSTALL > 100 LF (16.01' – 20' DEPTH)

1.01 SCOPE OF WORK

A. The Contractor shall furnish all labor, tools, equipment, incidentals and materials required to perform sanitary or storm sewer pipe open cut excavation spot repairs at the locations noted in authorized written Work Orders.

B. The Work under this Item includes, but is not limited to, the following:

1. Homeowner notifications.
2. Protection of existing utilities. Locating existing buried electric, gas, telephone, water, sewer, laterals, and other utilities in advance of pipe laying, and establishing their exact location and grade;
3. Required permits and fees.
4. Mobilization/demobilization to/from locations specified in Work Order
5. Maintenance of existing flows; bulkheading and plugging of sewers; bypass piping; bypass pumping systems; complete

handling of all materials, wet or dry.

6. Handling of water in trenches, including pumping and bailing, well points, or deep well pumping.
7. Saw cutting; excavation of materials, including rock, masonry, stone, boulders, etc. to the depth required; proper disposal of excavated material; etc.
8. Temporary sheeting/shoring; use of trench shield.
9. Removal and proper disposal of existing piping.
10. Furnishing and installing new polyvinyl chloride (PVC) sewer piping at all depths, laying pipe and making joints.
11. Pipe bedding, select fill under paved areas, backfilling and compaction.
12. Protection and handling of traffic including signs, lights, signals and watchmen, if required.
13. Post-repair video inspection and submission of video to Owner / Engineer for final review.
14. All other work items included in the Contract Documents necessary to complete the project as a whole and which is not specifically included under the other Items of the Contract shall be included under this Item.

D. All live sewer laterals within the spot repair location shall be re-instated/re-connected by the Contractor. The unit price cost for these connections including wye branch and elastomeric sleeves shall be paid under Bid Items No. 4. Length of new lateral pipe and riser pipe as needed shall be paid under Bid Item No. 3.

E. It shall be the Contractor's responsibility to locate and verify all live service connections that require re-instatement/re-connection. In the event that active service connections are missed or are not properly reconnected, it will be the Contractor's responsibility to reconnect said service at no additional cost to the Owner. If the Contractor fails to reconnect any live service connections, the cost of damages resulting from this failure shall be borne entirely by the Contractor.

F. All pavement replacement shall be performed in accordance with the requirements of the State, County and/or Town Highway Departments or other agency having jurisdiction over the highway and shall be paid under Bid Item Nos. 7 and 8.

G. All turf and lawn restoration including topsoil and seeding shall be paid under Bid Item No. 19.

H. In areas of poor soil conditions, as determined by the Engineer, the Contractor will be required to provide additional stone base undercut material in addition to the specified pipe bedding material. Costs for this additional stone base material and undercutting of the trench shall be included in Bid Item No. 13.

I. The Contractor shall obtain and pay for all necessary permits required in order to perform the work.

J. The work shall be performed in accordance with the Work Orders and Details, as specified, or as directed by the Engineer and shall comply with the permit requirements of the Departments or agencies, public or private, having jurisdiction.

K. The work under this item does not include material and work is to be included in the unit prices for sewer to sewer connections (i.e., elastomeric sleeves, etc.) under Bid Item 4.

1.02 MEASUREMENT AND PAYMENT – BID ITEM NO. 1

A. Measurement of length for payment shall be made in a horizontal plane along the centerline of the pipe for the length of spot repair completed and approved for payment by the Engineer. The length shall include the length of wye fittings. Deductions shall be made for poured-in-place or precast manholes and structures. Measurement of depth shall be made from the original ground surface to the invert of the pipe. The minimum length of repair shall be ten (10) linear feet.

B. Payment of the unit prices per linear foot as stated in the Proposal for pipe measured and approved for payment shall constitute full payment for all work done under this Bid Item.

PART II – BID ITEM NO. 2 – FORCEMAIN SEWER OPEN CUT REPAIR

BID ITEM NO. 2A –	6-8" DIA. SEWER PIPE INSTALL ≥ 10 LF & < 100 LF
BID ITEM NO. 2B –	>8-10" DIA. SEWER PIPE INSTALL ≥ 10 LF & < 100 LF
BID ITEM NO. 2C –	>10-12" DIA. SEWER PIPE INSTALL ≥ 10 LF & < 100 LF
BID ITEM NO. 2D –	>12-14" DIA. SEWER PIPE INSTALL ≥ 10 LF & < 100 LF
BID ITEM NO. 2E –	>14-16" DIA. SEWER PIPE INSTALL ≥ 10 LF & < 100 LF
BID ITEM NO. 2F –	>16-18" DIA. SEWER PIPE INSTALL ≥ 10 LF & < 100 LF
BID ITEM NO. 2G –	6-8" DIA. SEWER PIPE INSTALL >100 LF
BID ITEM NO. 2H –	>8-10" DIA. SEWER PIPE INSTALL > 100 LF
BID ITEM NO. 2I –	>10-12" DIA. SEWER PIPE INSTALL > 100 LF
BID ITEM NO. 2J –	>12-14" DIA. SEWER PIPE INSTALL >100 LF
BID ITEM NO. 2K –	>14-16" DIA. SEWER PIPE INSTALL > 100 LF
BID ITEM NO. 2L –	>16-18" DIA. SEWER PIPE INSTALL > 100 LF

2.01 SCOPE OF WORK

A. The Contractor shall furnish all labor, tools, equipment, incidentals and materials required to perform force main sewer pipe open cut excavation spot repairs of any depth at the locations noted in authorized written Work Orders.

B. The Work under this Item includes, but is not limited to, the following:

1. Homeowner notifications.
2. Protection of existing utilities. Locating existing buried electric, gas, telephone, water, sewer, laterals, and other utilities in advance of pipe laying, and establishing their exact location and grade;
3. Required permits and fees.
4. Mobilization/demobilization to/from locations specified in Work Order
5. Maintenance of existing flows; bulkheading and plugging of sewers; bypass piping; bypass pumping systems; complete handling of all materials, wet or dry.
6. Handling of water in trenches, including pumping and bailing, well points, or deep well pumping.
7. Saw cutting; excavation of materials, including rock, masonry, stone, boulders, etc. to the depth required; proper disposal of excavated material; etc.
8. Temporary sheeting/shoring; use of trench shield.
9. Removal and proper disposal of existing piping.
10. Furnishing and installing new polyvinyl chloride (PVC) sewer piping at all depths, laying pipe and making joints.
11. Pipe bedding, select fill under paved areas, backfilling and compaction.
12. Protection and handling of traffic including signs, lights, signals and watchmen, if required.
13. Post-repair video inspection and submission of video to Owner / Engineer for final review.
14. All other work items included in the Contract Documents necessary to complete the project as a whole and which is not specifically included under the other Items of the Contract shall be included under this Item.

C. All live sewer laterals or connections within the spot repair location shall be re-instated/re-connected by the Contractor. It shall be the Contractor's responsibility to locate and verify all live service connections that require re-instatement/re-connection. In the event that active service connections are missed or are not properly reconnected, it will be the Contractor's responsibility to reconnect said service at no additional cost to the Owner. If the Contractor fails to reconnect any live service connections, the cost of damages resulting from this failure shall be borne entirely by the Contractor.

D. All pavement replacement shall be performed in accordance with the requirements of the State, County and/or Town Highway Departments or other agency having jurisdiction over the highway and shall be paid under Bid Item Nos. 7 and 8.

E. All turf and lawn restoration including topsoil and seeding shall be paid under Bid Item No. 19.

F. In areas of poor soil conditions, as determined by the Engineer, the Contractor will be required to provide additional stone base undercut material in addition to the specified pipe bedding material. Costs for this additional stone base material and undercutting of the trench shall be included in Bid Item No. 13.

G. The Contractor shall obtain and pay for all necessary permits required in order to perform the work.

H. The work shall be performed in accordance with the Work Orders and Details, as specified, or as directed by the Engineer and shall comply with the permit requirements of the Departments or agencies, public or private, having jurisdiction.

I. The work under this item does not include material and work is to be included in the unit prices for sewer to sewer connections (i.e., elastomeric sleeves, etc.) under Bid Item 4.

2.02 MEASUREMENT AND PAYMENT – BID ITEM NO. 2

A. Measurement of length for payment shall be made in a horizontal plane along the centerline of the pipe for the length of spot repair completed and approved for payment by the Engineer. Deductions shall be made for poured-in-place or precast manholes and structures. Measurement of depth shall be made from the original ground surface to the invert of the pipe. The minimum length of repair shall be ten (10) linear feet.

B. Payment of the unit prices per linear foot as stated in the Proposal for pipe measured and approved for payment shall constitute full payment for all work done under this Bid Item.

PART III – BID ITEM NO. 3 – SEWER LATERAL PIPE REPLACEMENT

BID ITEM NO. 3A – 4" DIAMETER SEWER LATERAL PIPE REPLACEMENT
BID ITEM NO. 3B – 6" DIAMETER SEWER LATERAL PIPE REPLACEMENT
BID ITEM NO. 3C – 6" SEWER CLEANOUT (ANY DEPTH)

3.01 SCOPE OF WORK

A. The Contractor shall furnish all labor, materials, tools and equipment required to furnish and place sanitary sewer lateral pipe including excavation of all materials; disposal of excavated material; shoring and bracing; handling of water and sewage flows, maintenance of existing flows; disposal of surplus material excavated from the trench; furnishing and laying pipe and making joints; use of trench shield; backfilling of pipe trenches and bedding of pipe in earth and rock trenches according to the typical details; filling as required; filling authorized excavation with select backfill material; bedding; riser pipes as applicable, cleanouts, fittings, elbows, appurtenances, and all other work required for a complete installation.

B. All sidewalk and driveway replacement shall be performed and paid under Bid Item No. 17.

C. All turf and lawn restoration including topsoil and seeding shall be paid under Bid Item No. 19.

D. In areas of poor soil conditions, as determined by the Engineer, the Contractor will be required to provide additional stone base undercut material in addition to the specified pipe bedding material. Costs for this additional stone base material and undercutting of the trench shall be included in Bid Item No. 13.

E. Where indicated in the Work Order, or as directed by the Engineer, the Contractor shall replace lateral pipe to the right-of-way.

3.02 MEASUREMENT AND PAYMENT – BID ITEM NO. 3

BID ITEM NO. 3A – 4" DIAMETER LATERAL PIPE REPLACEMENT
BID ITEM NO. 3B – 6" DIAMETER LATERAL PIPE REPLACEMENT

A. Measurement for payment for open cut laterals shall be for the actual footage of sanitary lateral pipe installed as measured from outside the trench excavation for the main sewer to the connection point to the existing lateral, complete, in place, ready for use, and approved for payment by the Engineer.

B. Payment of the unit price per linear foot as stated in the proposal for the number of linear feet installed and approved for payment shall constitute full payment for all work done under this Bid Item.

C. The work under this item does not include material and work that is included in the unit prices for lateral connections under Bid Item 4 (i.e., wye branches).

BID ITEM NO. 3C – 6" CLEANOUT (ANY DEPTH)

A. Measurement for payment for sewer cleanouts shall be for the number of sewer cleanouts of all depths installed, complete, in place, ready for use, and approved for payment by the Engineer.

B. Payment of the unit price as stated in the proposal for the number of cleanouts installed and approved for payment shall constitute full payment for all work done under this Bid Item.

PART IV – BID ITEM NO. 4 –SEWER CONNECTIONS

BID ITEM NO. 4A –	CONNECTING LATERAL TO SEWER (WYE BRANCH)
BID ITEM NO. 4B –	CONNECTING SEWER TO SEWER (ELASTOMERIC SLEEVE)
BID ITEM NO. 4C –	CONNECTING SEWER TO EXISTING MANHOLE
BID ITEM NO. 4D –	MANHOLE CORING (8" – 12" SEWER)
BID ITEM NO. 4E –	MANHOLE CORING (>12" – 24" SEWER)
BID ITEM NO. 4F –	MANHOLE CORING (>24" – 42" SEWER)
BID ITEM NO. 4G –	CONNECTING STORM LATERAL TO EXISTING CATCH BASIN

4.01 SCOPE OF WORK

A. The Contractor shall furnish all labor, materials, tools and equipment required to make various sewer connections including: connecting existing laterals to sewer spot repairs, connecting new lateral pipe to existing laterals, connecting new sewers to existing sewers, connecting sewers to existing manholes, coring existing sanitary or storm manholes, and connecting storm laterals to existing catch basins. The work shall include excavation of all materials, disposal of excavated material, bedding, sheeting and shoring, backfill, pipe, fittings, sleeves, couplers, or other appurtenances required for the sewer connection as shown in the Work Orders, Details, as specified, or as directed by the Engineer.

B. The Contractor shall assist the Owner's inspector in collecting record drawing information for the location of lateral connections within the spot repair. The Contractor shall assist the Owner's inspector in determining the location of lateral connections via wye branch as measured from the last downstream manhole as well as at least two ties to existing structures, preferably the corners of the house for which the wye branch is intended.

C. The method of compensation shall be further broken down as follows:

BID ITEM NO. 4A – CONNECTING LATERAL TO SEWER (WYE BRANCH)

Work shall include furnishing and installing the wye fitting, the length of the lateral pipe inside the trench excavation of the main sewer, and connection of the lateral pipe to the existing lateral pipe, with elastomeric sleeves if required. The unit price bid shall include all fittings, elbows, couplers, etc. as required. The Contractor shall furnish wye branches of the same class as the sewer.

BID ITEM NO. 4B – CONNECTING SEWER TO SEWER (ELASTOMERIC SLEEVE)

Work shall include elastomeric sleeve connection of new sewer to existing sewer.

BID ITEM NO. 4C – CONNECTING SEWER TO MANHOLE

Work shall include installing a new sewer connection to either: an existing manhole with an existing cutout and/or pipe opening; or a new manhole with a watertight boot, cutout or pipe opening. The work shall include sewer pipe connection, mortar grouting, invert/bench work and/or repairs as necessary, and coatings.

SECTION 01020 – PART IV

BID ITEM NO. 4D – MANHOLE CORING (8" – 12" SEWER)
BID ITEM NO. 4E – MANHOLE CORING (>12" – 24" SEWER)
BID ITEM NO. 4F – MANHOLE CORING (>24 – 42" SEWER)

Work shall include coring a pipe opening in an existing brick or precast manhole in order to facilitate a new sewer connection. Work shall include coring a pipe opening of a suitable diameter to facilitate installation of the sewer pipe scheduled for connection. This item shall not include work to make the sewer connection as included and paid under Bid Item No. 4C.

BID ITEM NO. 4G – CONNECTING STORM LATERAL TO EXISTING CATCH BASIN

Work shall include installing a storm lateral connection into an existing catch basin (into an existing cutout or pipe opening) including storm lateral pipe connection, mortar grouting, and coatings.

4.02 MEASUREMENT AND PAYMENT – BID ITEM NO. 4

BID ITEM NO. 4A – CONNECTING LATERAL TO SEWER (WYE BRANCH)
BID ITEM NO. 4B – CONNECTING SEWER TO SEWER (ELASTOMERIC SLEEVE)
BID ITEM NO. 4C – CONNECTING SEWER TO EXISTING MANHOLE
BID ITEM NO. 4D – MANHOLE CORING (8" – 12" SEWER)
BID ITEM NO. 4E – MANHOLE CORING (>12" – 24" SEWER)
BID ITEM NO. 4F – MANHOLE CORING (>24 – 42" SEWER)
BID ITEM NO. 4G – CONNECTING STORM LATERAL TO EXISTING CATCH BASIN

A. The quantity to be paid for under Items 4A, 4B, 4C, 4D, 4E, 4F, and 4G shall be the actual number of sewer connections installed and approved by the Engineer.

B. Payment of the unit price stated in the Proposal for the actual number of connections installed and approved for payment shall constitute full payment for all work done under this Bid Item.

C. Any "run" footage of the wye branch outside of the main trench shall be paid for under Bid Item No. 1.

PART V – BID ITEM NO. 5 – STANDARD MANHOLES

BID ITEM NO. 5A – 4' DIAMETER STANDARD MANHOLE
BID ITEM NO. 5B – 5' DIAMETER STANDARD MANHOLE
BID ITEM NO. 5C – 6' DIAMETER STANDARD MANHOLE
BID ITEM NO. 5D – 8' DIAMETER STANDARD MANHOLE

5.01 SCOPE OF WORK

A. The Contractor shall furnish all labor, materials, tools, equipment and incidentals required to furnish and place standard manholes with precast concrete base sections of the diameters required, including all excavation, including rock, to the required depths;

concrete bases of the required diameter; reinforced concrete barrel sections (without lifting holes); reducer section, neoprene gasket and joint compound; cast iron frames and covers (installation only, frame and cover furnished by Owner); precast reinforced concrete extension rings; stubs with plugs where indicated and/or as ordered by the Engineer; reinforced polypropylene manhole steps; reinforced concrete slab top for manholes less than 5'-0" in depth; pumping and/or bailing as required; concrete construction; concrete bench; perforated plastic pipe; bedding; backfill; mortar; coatings; furnish and install pipe stubs and other incidentals; testing of completed work; and all other work or expense required for a complete installation and not included in other Bid Items.

B. All manholes shall be tested as per, and shall conform in all respects to, Section 02376 of these Specifications.

C. **The manhole frames and covers shall be provided by the Owner.** The frames and covers will be located at the respective Sewer District offices in which the repair is taking place, and it will be the Contractor's responsibility to pick them up at these locations.

5.02 MEASUREMENT AND PAYMENT – BID ITEM NO. 5

A. Measurement for payment will be the vertical linear footage (VLF) of manholes completed, tested and approved by the Engineer, measured from the top of the cover to the lowest pipe invert of the manhole. The minimum manhole depth shall be six (6) VLF.

B. Payment of the unit price stated in the Proposal for the vertical linear footage of manholes approved for payment shall constitute full payment for all work done under this Bid Item.

PART VI – BID ITEM NO. 6 – PRECAST CONCRETE CATCH BASIN

6.01 SCOPE OF WORK

A. The Contractor shall furnish all labor, materials, tools and equipment required to furnish and install precast concrete catch basins including excavation of all materials, disposal of excavated material, bedding, backfill, brick, mortar, coatings, two (2) foot section of lateral pipe extending from the exterior face of the catch basin connection to laterals and underdrains, catch basin structure, frames and grates, shoring and bracing, shown in the Work Orders, Details, and specified, or as directed by the Engineer.

6.02 MEASUREMENT AND PAYMENT – BID ITEM NO. 6

A. Measurement for payment will be the vertical linear feet of catch basins completed, tested, and approved by the Engineer, measured from the top of the cover to the lowest invert of the catch basin. The minimum catch basin depth shall be six (6) VLF.

B. Payment of the unit price stated in the Proposal for the linear feet of catch basins approved for payment shall constitute full payment for all work done under this Bid Item.

PART VII – BID ITEM NO. 7 – PAVEMENT REPLACEMENT/RESTORATION

Heavy Duty Pavement Replacement (Existing asphalt concrete base is 8" or > thick)
BID ITEM NO. 7A – Heavy Duty Pavement Restoration (Less than 50 SF)
BID ITEM NO. 7B – Heavy Duty Pavement Restoration (50-249.9 SF)
BID ITEM NO. 7C – Heavy Duty Pavement Restoration (250-499.9 SF)
BID ITEM NO. 7D – Heavy Duty Pavement Restoration (500 SF and greater)

Medium Duty Pavement Replacement (Existing asphalt concrete base is 3" to < 8" thick)
BID ITEM NO. 7E – Medium Duty Pavement Restoration (Less than 50 SF)
BID ITEM NO. 7F – Medium Duty Pavement Restoration (50-249.9 SF)
BID ITEM NO. 7G – Medium Duty Pavement Restoration (250-499.9 SF)
BID ITEM NO. 7H – Medium Duty Pavement Restoration (500 SF and greater)

Light Duty Pavement Replacement (Existing asphalt concrete base is < 3" thick)
BID ITEM NO. 7I – Light Duty Pavement Restoration (Less than 50 SF)
BID ITEM NO. 7J – Light Duty Pavement Restoration (50-249.9 SF)
BID ITEM NO. 7K – Light Duty Pavement Restoration (250-499.9 SF)
BID ITEM NO. 7L – Light Duty Pavement Restoration (500 SF and greater)

Concrete Base Replacement (Existing concrete base is 8" or > thick)
BID ITEM NO. 7M – Concrete Base Pavement Restoration (Less than 50 SF)
BID ITEM NO. 7N – Concrete Base Pavement Restoration (50-249.9 SF)
BID ITEM NO. 7O – Concrete Base Pavement Restoration (250-499.9 SF)
BID ITEM NO. 7P – Concrete Base Pavement Restoration (500 SF and greater)

Note: The pavement areas (in SF) denoted above refer to the area of pavement restoration per spot repair.

7.01 SCOPE OF WORK

A. The Contractor shall furnish all labor, materials, tools and equipment required to remove and replace existing pavement disturbed by the pipe trench and replace with an asphalt or concrete base, hot mix asphalt binder, tack coat and top course where indicated in the Work Orders and Details, determined in the field or as ordered by the Engineer, within the pay widths indicated in the Details and in conformance with the requirements of the State, County, and/or Town Highway Departments or other agency having jurisdiction over the highway. The work shall include concrete dowelling to existing concrete base as applicable.

B. All permits required by State, County and/or Town Highway Department to perform the work, will be obtained and paid for by the Contractor prior to construction.

C. If there is any variance between the provisions of the permits and the Specifications, the provisions of the permit shall supersede those of the Specifications.

D. Blacktop Removal and Replacement Requirements

1. Prior to excavation the pavement at the trench wall lines shall be cut with a saw, pneumatic spade or other acceptable means.

2. Before final pavement restoration, the Contractor shall saw cut an additional one foot on each side of the disturbed trench area, so as to provide a uniform straight edge on undisturbed ground. The cut edge shall be coated with a bituminous seal coat before final paving.

3. All roads, unless otherwise stated or covered by permits, shall be reconstructed with a minimum 3" course of binder and a 1 ½" top course. Also, the Contractor will be required to re-stripe the repaved roadway/shoulder area in accordance with the direction provided by the Highway Department having jurisdiction. Re-striping shall be paid for under Bid Item 21.

4. The furnishing and placing of cold patch pavement if directed by the Engineer shall be paid under Bid Items 8C and 8D. The Contractor shall maintain the cold patch pavement for the duration required. No additional payment shall be made to maintain or reinstall cold patch.

E. Shoulder Removal and Replacement

1. Existing road shoulder(s) shall be replaced in kind and quality, to the satisfaction of the State, County and/or Town Highway Department. The replacement of road shoulder(s) shall be paid under Bid Item 8E.

F. Highway Department of Jurisdiction

1. The Contractor shall furnish all labor, materials, tools, equipment and incidentals required to restore all other highway/roadway pavement areas outside the pay limits of the contract disturbed by his construction operations to a condition acceptable to the State, County, or Town Highway Department, or other agency having jurisdiction over the highway. The cost of this remedial work outside the established contract pay limits shall be borne by the Contractor.

2. Upon completion of the project, the Contractor must secure a letter of approval from the Division or Agency having jurisdiction over the highway. The letter should clearly indicate the agency's acceptance of the pavement restoration and the letter must be received prior to final payment and the release of retention.

7.02 MEASUREMENT AND PAYMENT – BID ITEM NO. 7

A. Measurement for payment for pavement replacement shall be the actual number of square feet of pavement installed within the specified pay limits. The method of compensation shall be further broken down as follows:

SECTION 01020 – PART VII

1. Pavement Restoration (Bid Items 7A through 7P) -Measurement for payment shall be the actual number of square feet installed within the specified pay limits which shall be measured as the sewer trench pay limit width multiplied by the number of linear feet of sewer spot repair installed, as measured along the centerline of the improvements to the limits as identified and approved by the Engineer. The unit cost bid for this item shall be inclusive of all work items for trench restoration including furnishing and installing base, binder, seal coat, tack coat, top course, and all labor for a complete installation. Payment of the unit price stated in the Proposal for the work completed and approved shall constitute full payment for all work done under this Bid Item.

PART VIII – BID ITEM NO. 8 – MISCELLANEOUS PAVEMENT RESTORATION

BID ITEM NO. 8A –	Miscellaneous Cold Milling of Asphalt Concrete
BID ITEM NO. 8B –	1-1/2" Top Course Asphalt Concrete Pavement Restoration in areas of cold milling only
BID ITEM NO. 8C –	Temporary Pavement Patch (Asphalt)
BID ITEM NO. 8D –	Temporary Pavement Patch (Concrete)
BID ITEM NO. 8E –	Shoulder Replacement

8.01 SCOPE OF WORK

A. The Contractor shall furnish all labor, materials, tools and equipment required to perform miscellaneous pavement restoration including milling, remove and replace existing pavement disturbed by the pipe trench and replace with an asphalt or concrete base, hot mix asphalt binder, tack coat and top course where indicated on in the Work Orders and Details, determined in the field or as ordered by the Engineer, within the pay widths indicated in the Details and in conformance with the requirements of the State, County, and/or Town Highway Departments or other agency having jurisdiction over the highway. Refer to Part VII for additional applicable pavement restoration notes.

8.02 MEASUREMENT AND PAYMENT – BID ITEM NO. 8

1. Miscellaneous Cold Milling of Asphalt Concrete (Bid Item No. 8A) – Measurement for payment shall be the actual number of square feet milled, as measured within the specified pay limits as detailed in the Work Orders and Details, and approved by the Engineer. The unit cost bid for this item shall be inclusive of all work items. Payment of the unit price stated in the Proposal for the work completed and approved shall constitute full payment for all work done under this Bid Item.

2. 1-1/2" Top Course Asphalt Concrete Pavement Restoration in areas of cold milling only (Bid Item No. 8B) – Measurement for payment shall be the actual number of square feet installed, as measured within specified pay limits as shown in the Work Orders and Details, and approved by the Engineer. The unit cost bid for this item shall be inclusive of all work items. Payment of the unit price stated in the Proposal for the work completed and approved shall constitute full payment for all work done under this Bid Item.

3. Temporary Pavement Patch (Asphalt, Concrete) (Bid Items 8C and 8D) - Measurement for payment shall be the actual number of square feet, measured to the nearest square foot, of temporary pavement patch installed within the specified pay limits which shall be measured as the sewer trench pay limit width multiplied by the number of linear feet of sewer spot repair installed, as measured along the centerline of the improvements to the limits as identified and approved by the Engineer. The minimum depth of pavement patch shall be 4 inches.

4. Road Shoulder Removal and Replacement (Bid Item 8E) – Measurement for payment shall be the actual linear feet on road shoulder removed and replaced, as measured along the road edge within the specified pay limits as detailed in the Work Orders and Details, and approved by the Engineer. The unit cost bid for this item shall be inclusive of all work items. Payment of the unit price stated in the Proposal for the work completed and approved shall constitute full payment for all work done under this Bid Item.

PART IX – BID ITEM NO. 9 – DROP MANHOLE PIPE ASSEMBLIES

BID ITEM NO. 9A – DROP MANHOLE PIPE ASSEMBLIES (8" SEWER)
BID ITEM NO. 9B – DROP MANHOLE PIPE ASSEMBLIES (10" SEWER)
BID ITEM NO. 9C – DROP MANHOLE PIPE ASSEMBLIES (12" SEWER)
BID ITEM NO. 9D– DROP MANHOLE PIPE ASSEMBLIES (15" SEWER)

9.01 SCOPE OF WORK

A. The Contractor shall furnish all labor, materials, tools, equipment, supervision and incidentals required install an inside drop pipe into a manhole including the drop leg, tee cutout, elbows, fittings, couplings, anchorage, wood blocking, invert/bench work and/or repairs as required, and all other work or expense required for a complete installation and not included in other Bid Items.

9.02 MEASUREMENT AND PAYMENT – BID ITEM NO. 9

A. Measurement for payment shall be for the number of drop pipe assemblies installed complete, in place, ready for use and approved for payment by the Engineer.

B. Payment of the unit price stated in the Proposal for the work completed and approved for payment shall constitute full payment for all work done under this Bid Item.

SECTION 01020 – PART X

PART X – BID ITEM NO. 10 – CONCRETE CRADLE AND ENCASEMENT

10.01 SCOPE OF WORK

A. The work shall consist of furnishing and placing concrete for sewer cradle and encasement as indicated in the Work Orders, Details, as specified, or as directed by the Engineer.

B. The Contractor shall furnish all labor, materials, tools and equipment required to furnish and place Class 2000 psi concrete for encasement of sewers where indicated in the Work Orders, Details, as specified, or where ordered by the Engineer.

C. The unit price per cubic yard bid for concrete encasement as stated in the Proposal shall include all additional excavation, disposal of surplus material and all other work required for a complete installation.

D. Concrete encasement shall be required for the following conditions:

1. Where required by the conditions of a governing permit,

2. Where there is less than 18 inches of vertical clearance and/or less than 10 feet horizontal clearance between an existing water main and the proposed sewer. For crossings, the concrete encasement shall extend for 3 feet to each side of the water main centerline.

3. Where a proposed sewer crosses under any roadway, and the distance from the top of roadway to top of sewer is less than 4 feet. For roadway crossings the concrete encasement shall extend for 2 feet beyond the edge of payment.

10.02 MEASUREMENT AND PAYMENT - BID ITEM NO. 10

A. Measurement for payment shall be the actual cubic yards of concrete cradle and encasement installed and approved by the Engineer for payment, or as ordered in writing by the Engineer, prior to the work being done.

B. Payment of the unit price stated in the Proposal for the quantities measured and approved for payment shall constitute full payment for all work done under this Bid Item.

PART XI – BID ITEM NO. 11 – ADDITIONAL CRUSHED STONE BEDDING

11.01 SCOPE OF WORK

A. Where approved as extra work, the Contractor shall furnish, place and consolidate crushed stone bedding as shown on plans and in accordance with Section 02200.

B. The work shall include the hauling and disposal of surplus excavated material being replaced by the crushed stone bedding.

C. The work under this item does not include material and work that is to be included in the unit prices for sewer pipe under Bid Items No. 1 and 3, manholes under Bid Item 5, or catch basins under Bid Item 6.

11.02 MEASUREMENT AND PAYMENT - BID ITEM NO. 11

A. Measurement for payment shall be the actual cubic yards of crushed stone bedding in place within the pay limits shown in the Details and Specifications, and approved by the Engineer for payment, or as ordered in writing by the Engineer, prior to the work being done.

B. Payment of the unit price stated in the Proposal for the quantities measured and approved for payment shall constitute full payment for all work done under this Bid Item.

PART XII – BID ITEM NO. 12– ADDITIONAL SELECT MATERIAL BACKFILL

12.01 SCOPE OF WORK

A. Where approved as extra work, the Contractor shall furnish, place and consolidate select material backfill for backfilling trench, manhole or structure excavations as in accordance with Section 02200.

B. In all instances, select material backfill shall be placed where called for on in the Work Orders and Details, as specified, or as directed in the field. The work shall include the hauling and disposal of surplus excavated material being replaced by the select fill material.

C. The work under this item does not include material and work that is to be included in the unit prices for sewer pipe under Bid Items No. 1 and 3, manholes under Bid Item 5, or catch basins under Bid Item 6. The work under this item does not include the furnishing and placing of crushed stone for bedding pipe, or the placing of material to be used for the restoration of cinder, gravel or stone driveways, shoulders and walks, which material and work is to be included in the unit prices for pipe under Bid Items No. 1 and 3.

D. Select Backfill Requirements and Acceptable Materials

1. Under residential driveways (paved or unpaved), the full depth from the top of bedding material to existing ground shall be backfilled and compacted in 6" lifts with 2" run of crusher stone or 2" run of crusher gravel as per New York State Department of Transportation Section 304-2.02 and Section 703.02.

2. Under commercial driveways (paved or unpaved) and parking lots, the full depth from top of bedding material to existing ground shall be backfilled and compacted in 6" lifts with 2" run of crusher stone or 2" run of crusher gravel as per New York State Department of Transportation Section 304-2.02 and Section 703.02.

3. Under State, County or Town roads, the trench shall be backfilled as described for commercial driveways, item 2 above, unless otherwise stated in the governing permit.

4. Under State and County road shoulders the trench shall be backfilled as described for commercial driveways, item 2 above, unless otherwise stated in the governing permit.

5. Under Town road shoulders the trench shall be backfilled as described for residential driveways, item 1 above, unless otherwise stated in the governing permit.

E. Loading Slips

Copies of loading slips for all select material backfill delivered to the project shall be submitted to the Owner's inspector. Loading slips shall clearly indicate volume, type of material, New York State Department of Transportation Item Number, Contractor and date.

12.02 MEASUREMENT AND PAYMENT - BID ITEM NO. 12

A. Measurement for payment shall be the actual cubic yards of compacted select material in place within the pay limits shown in the Details or Specifications, and approved by the Engineer for payment, or as ordered in writing by the Engineer, prior to the work being done.

B. Payment of the unit price stated in the Proposal for the quantities measured and approved for payment shall constitute full payment for all work done under this Bid Item.

PART XIII – BID ITEM NO. 13 – ADDITIONAL STONE FOR UNDERCUT

13.01 SCOPE OF WORK

A. The Contractor shall furnish all labor, materials, tools and equipment required to furnish and install geotextile fabric, run-of-crusher stone material NYSDOT Item No. 304.02-Type 1 gradation (as per NYSDOT Section 304-2.02 and Section 703.02), compacted in

6" lifts, at locations shown on the Drawings and as determined in the field or as directed in writing by the Engineer for the unit prices as stated in the Proposal.

B. The unit prices stated in the Proposal shall include all additional excavation, in open trenches, within sheeting boxes or within temporary sheeting, shoring and bracing, disposal of surplus excavated material; any additional sheeting required from the pipe invert to the trench bottom; providing and placing the geotextile fabric, placing and consolidating the additional stone, handling of water, including pumping and bailing, well points or deep well pumping; rock excavation and all other work or expense required for a complete installation.

13.02 MEASUREMENT AND PAYMENT – BID ITEM NO. 13

A. Measurement for payment shall be the actual calculated number of cubic yards of additional stone for undercut in place within the pay limits as shown on in the Details and Specifications and approved by the Engineer for payment.

B. Payment of the unit prices stated in the proposal for the quantity measured and approved for payment shall constitute full payment for all work done under this Bid Item.

PART XIV – BID ITEM NO. 14 – ROCK EXCAVATION

14.01 SCOPE OF WORK

A. The Contractor shall furnish all labor, materials, tools and equipment required to excavate rock within the limits outlined in these Specifications, or as given by the Engineer.

B. The term "rock" as used herein shall include all material requiring drilling and blasting, ripping, wedging, jack hammering or sledging and barring for their removal from their original beds and specifically includes materials classed as such in normal geological terminology and shall include all ledge or bed rock, solidified slag, boulders or masonry larger than one cubic yard in volume.

C. Rock shall be excavated in general so that there will be a clean horizontal space of at least 12 inches from the inside barrel of the pipe, and 12 inches from the outside of the manhole
base, chamber base or structure base to the rock surface. Rock shall be removed at least 6 inches below the outside barrel of the pipe at the invert.

D. After the rock has been removed from the trench and prior to placing the bedding material or pipe, the Engineer shall be notified in order that he may measure the same.

E. It is the intention of these Specifications that soft rock material, which is mixed with clay, sands, loose gravel and silts and does not form a rock mass, shall not be included in this Bid Item.

14.02 MEASUREMENT AND PAYMENT – BID ITEM NO. 14

A. The quantity measured for payment under this Bid Item shall be the number of cubic yards of rock removed and disposed of measured in its original position between the pay lines specified below or ordered by the Engineer.

B. Unless otherwise ordered by the Engineer, in writing, the payment lines for rock excavation shall be as follows:

In trenches: One (1) foot outside of the inside surface of the pipe on the sides, and from the surface of the rock adjusted by the determined heave as outlined above to the pipe measured at the invert, or as ordered by the Engineer.

For Structures: One (1) foot outside the footing lines of the structure, manholes, chambers on all sides, and from the surface of the rock adjusted by the determined heave as outlined above to the level of the pipe or channel invert elevation of the structure, manhole, chamber, shown on in the Details and Specifications, or as ordered by the Engineer.

C. Slag, boulders or masonry less than one cubic yard in volume shall not be measured for payment.

D. Contractor required to excavate rock 6" below outside pipe bell, manhole, structure, chamber as per details on plans.

E. Payment of the unit price per cubic yard stated in the Proposal for rock measured and approved for payment shall constitute full payment for all work done under this Bid Item.

PART XV – BID ITEM NO. 15 – TEST PIT EXCAVATION

15.01 SCOPE OF WORK

A. The Contractor shall furnish all labor, materials, tools and equipment required to excavate and backfill test pits, at locations as ordered by the Engineer for determining the exact nature and/or location of certain underground utilities or obstructions, or other purpose as required. All test pits shall be completed prior to the construction of proposed scheduled improvements.

B. The work under this item shall be in accordance with the detailed specification requirements and shall include clearing, excavating, necessary shoring and bracing, dewatering, clean up and restoration.

C. The work under this item also includes making the necessary arrangements with the utility companies.

D. The excavation of any test pits shall not relieve the Contractor of the responsibility for protection of utilities as detailed in the Specifications.

E. The Contractor shall bid a unit price for a standard utility test pit up to 8 cubic yards (CY) in size. If ordered by the Engineer, the Contractor will be paid for any utility test pit larger than this standard size in proportion to the unit price bid for the standard utility test pit.

15.02 MEASUREMENT AND PAYMENT – BID ITEM NO. 15

A. Measurement and payment shall be the number of utility test pits completed and approved for payment by the Engineer.

B. Payment of the unit price stated in the Proposal for the number of utility test pits completed and approved for payment shall constitute full payment for all work done under this Bid Item.

PART XII – BID ITEM NO. 16 – SEWER ABANDONMENT

BID ITEM NO. 16A – ABANDON EXISTING SEWER – BULKHEAD / PLUG
BID ITEM NO. 16B – ABANDON EXISTING SEWER – FILLING OF VOIDS
BID ITEM NO. 16C – ABANDON EXISTING SEWER – MANHOLES

16.01 SCOPE OF WORK

A. The Contractor shall furnish all labor, materials, tools and equipment required in the abandonment of pipes and/or manholes at locations identified in Work Orders or as ordered by the Engineer, and in a manner as specified in Section 02900. The unit cost bid shall be all inclusive of the work and material required for complete abandonment of pipes and/or manholes including restoration of the work area to match existing site conditions.

16.02 MEASUREMENT AND PAYMENT – BID ITEM NO. 16

BID ITEM NO. 16A – ABANDON EXISTING SEWER – BULKHEAD / PLUG

A. For the furnishing and placing of plugs or bulkheads in abandoned sewers, the measurement and payment shall be for the number of plugs/bulkheads installed and approved

by the Engineer. Payment of the unit price as stated in the Proposal for work completed and approved by the Engineer shall constitute full payment for all work done under this Bid Item.

BID ITEM NO. 16B – ABANDON EXISTING SEWER – FILLING OF VOIDS

B. For the abandonment of existing force mains, gravity sewers, and other utility pipes identified for abandonment by the Engineer, measurement and payment will be the number of cubic yards of approved fill material used to fill the sewer/pipeline approved by the Engineer. The payment of the unit price as stated in the proposal shall constitute full payment for all work completed under this task.

BID ITEM NO. 16C – ABANDON EXISTING SEWER – MANHOLES

C. For the abandonment of existing manholes identified for abandonment by the Engineer, measurement and payment will be the number of manholes abandoned and approved by the Engineer. The payment of the unit price as stated in the proposal shall constitute full payment for all work completed under this task.

PART XVII – BID ITEM NO. 17 – SIDEWALK / DRIVEWAY REPLACEMENT

BID ITEM NO. 17A – Concrete Sidewalk Restoration
BID ITEM NO. 17B – Concrete Driveway Restoration
BID ITEM NO. 17C – Asphalt Driveway Restoration – Light Duty (≤ 4.5" thick total)
BID ITEM NO. 17D – Asphalt Driveway Restoration – Medium Duty (> 4.5" thick total)
BID ITEM NO. 17E - Reset Existing Brick Pavers / Stone Sidewalk

17.01 SCOPE OF WORK

A. The Contractor shall furnish all labor, materials, tools, equipment and incidentals required to remove and replace existing driveways and sidewalks disturbed/damaged during construction in kind and quality. The work shall consist of saw-cutting, excavation, disposal of excavated materials, brick/stone salvage as applicable, gravel sub-base, stone base, concrete, reinforcement, asphalt concrete, tack coat, and all other work for a complete installation.

B. Bituminous macadam driveways shall be reconstructed with a minimum 4.5" thick pavement replacement.

C. Concrete driveways shall be reconstructed with minimum 6" thick reinforced concrete. Concrete sidewalks shall be reconstructed with minimum 4" thick reinforced concrete.

D. Costs for removal and replacement of stone and/or dirt driveways shall be included in the unit prices bid under Bid Items No. 1 and 3.

E. All driveways shall be restored to a condition satisfactory to the individual property owner and the Engineer.

17.02 MEASUREMENT AND PAYMENT – BID ITEM NO. 17

A. Measurement for payment shall be the actual number of square feet of sidewalk or driveway pavement, as measured pursuant to the pay limits as established by the contract document or approved by the Engineer.

B. Payment of the unit price per square feet as stated in the Proposal shall constitute full payment for all work done under this Bid Item.

PART XVIII – BID ITEM NO. 18 – CONCRETE GUTTER RESTORATION

18.01 SCOPE OF WORK

A. The Contractor shall furnish all labor, materials and equipment necessary to restore existing concrete gutter including saw cutting, excavation, disposal of excavated materials, gravel base, concrete, reinforcement, caulking, and joint filter as shown on in the Work Orders, Details, as specified, or as ordered by the Engineer.

B. For sewer trenches crossing perpendicular to the existing curbing, the Contractor is advised the pay limits will equal the trench pay width plus 1'-0" on each side. The Contractor will be responsible for all concrete gutter repair costs disturbed by the construction and outside the designated pay limits. For sewer trenches parallel to the concrete gutter, the extent of concrete gutter scheduled for replacement will be identified in the Work Order. Concrete gutter that is not crossing through a sewer trench or is not identified for replacement shall be protected by the Contractor and restored at their expense.

18.02 MEASUREMENT AND PAYMENT – BID ITEM NO. 18

A. Measurement for payment shall be the actual number of lineal feet of concrete gutter installed and approved by the Engineer.

B. Payment for the unit price per linear feet stated in the Proposal shall constitute full payment for all work done under this Bid Item.

SECTION 01020 – PART XIX

PART XIX – BID ITEM NO. 19 – TURF RESTORATION

19.01 SCOPE OF WORK

A. The work shall consist of furnishing and placing turf restoration including grading, topsoil, grass seed, fertilizer, mulch, mulch anchorage, and maintenance as shown in the Work Orders and Details, as specified, or as ordered by the Engineer. All lawn and field areas shall be restored utilizing the hydroseed method of application.

19.02 MEASUREMENT AND PAYMENT – BID ITEM NO. 19

A. Measurement for payment shall be the actual number of square feet of turf surface area restoration installed.

B. Payment of the unit price per square feet as stated in the Proposal shall constitute full payment for all work done under this Bid Item.

PART XX – BID ITEM NO. 20 – CURB REPLACEMENT

BID ITEM NO. 20A – Concrete Curbing Restoration
BID ITEM NO. 20B – New Stone Curbing Restoration
BID ITEM NO. 20C – Reset Existing Stone Curbing

20.01 SCOPE OF WORK

A. The Contractor shall furnish all labor, materials, tools and equipment required to reset or replace existing curbing including sawcutting, excavation, disposal of excavated materials, stone salvage, gravel base, concrete cradle and backing, stone curbing, concrete, reinforcement, grout, caulking, joint filler, and mortar. Curbing shall be replaced in kind unless otherwise ordered by the Engineer. This item shall include any new curbing ordered by the Engineer to be installed, including curbing not shown in the Work Orders and Details.

More specifically, Bid Item No. 20 shall include:

1. Concrete as specified in Section 03310
2. Pavement and surfacing as specified in Section 02600
3. Restoration as specified in Section 02800

For sewer trenches crossing perpendicular to the existing curbing, the Contractor is advised the pay limits will equal the trench pay width plus 1'-0" on each side. The Contractor will be

responsible for all curb repair costs disturbed by the construction and outside the designated pay limits. For sewer trenches parallel to the curb, the extent of curbing scheduled for replacement will be identified in the Work Order. Curbing that is not crossing through a sewer trench or is not identified for replacement shall be protected by the Contractor and restored at their expense.

20.02 MEASUREMENT AND PAYMENT – BID ITEM NO. 20

A. Measurement for payment shall be the actual number of lineal feet of curbing installed and approved by the Engineer.

B. Payment for the unit price per linear feet stated in the Proposal shall constitute full payment for all work done under this Bid Item.

PART XXI – BID ITEM NO. 21 – PAVEMENT STRIPING

BID ITEM NO. 21A – Pavement Striping
BID ITEM NO. 21B – Pavement Letter/Symbol

21.01 SCOPE OF WORK

A. The Contractor shall furnish all labor, materials and equipment necessary to restore pavement marking paint to match existing conditions, or as ordered by the Engineer.

21.02 – MEASUREMENT AND PAYMENT – BID ITEM NO. 21

BID ITEM NO. 21A – Pavement Striping

A. Measurement for payment shall be the actual number of lineal feet of painted pavement stripe installed and approved by the Engineer.

B. Payment for the unit price per linear feet stated in the Proposal shall constitute full payment for all work done under this Bid Item.

BID ITEM NO. 21B – Pavement Letter/Symbol

C. Measurement for payment shall be the actual number of painted pavement letters/symbols installed and approved by the Engineer.

D. Payment for the unit price per linear feet stated in the Proposal shall constitute full payment for all work done under this Bid Item.

PART XXII – BID ITEM NO 22 – MANHOLE ADJUSTMENT, 0-1 FEET

22.01 SCOPE OF WORK

A. The Contractor shall furnish all labor, material, tools, equipment, services and incidentals necessary to adjust existing manhole rims including: sawcutting of pavement; excavation and backfill; removal and cleaning of existing manhole frame and cover and return to Owner; repair of existing walls; scarifying and/or removing or otherwise preparing top portion of

existing walls; make necessary adjustments to existing manhole riser section to install manhole frame and cover to finished grade; installing new manhole frame and cover; concrete encasement; cleaning of existing manhole structure; dampproofing of interior masonry; and disposal of debris as described in the Work Order or specified, or as ordered by the Engineer.

B. Asphalt pavement patching is not included in this work and shall be paid under Bid Items No. 7 and 17.

C. **The manhole frames and covers shall be provided by the Owner.** The frames and covers will be located at the respective Sewer District offices in which the spot repair is taking place, and it will be the Contractor's responsibility to pick them up at these locations.

22.02 MEASUREMENT AND PAYMENT – BID ITEM NO. 22

A. Measurement for payment will be the number of manholes adjustments completed, and approved by the Engineer.

B. Payment of the unit price stated in the Proposal for the number of manhole adjustments approved for payment shall constitute full payment for all work done under this Bid Item.

PART XXIII – BID ITEM NO. 23 – CATCH BASIN ADJUSTMENT, 0-1 FEET

23.01 SCOPE OF WORK

A. The Contractor shall furnish all labor, material, tools, equipment, services and incidentals necessary to adjust existing catch basin elevations including: sawcutting of pavement; excavation and backfill; removal and cleaning of existing frame and grate; removal and cleaning of curbing; repair of existing walls; make necessary adjustments to existing catch basin to install manhole frame and grate to finished grade; forms; concrete; drill holes; reinforcing; grout; mortar mix; furnishing and installing new frame and grate; cleaning of existing catch basin; dampproofing of interior and exterior masonry; resetting of curbing; and disposal of debris as described in the Work Order or specified, or as ordered by the Engineer.

B. Asphalt pavement patching is not included in this work and shall be paid under Bid Item No. 7 and 17.

SECTION 01020 – PART XXIII

23.02 MEASUREMENT AND PAYMENT – BID ITEM NO. 23

A. Measurement for payment will be the number of catch basin adjustments completed, and approved by the Engineer.

B. Payment of the unit price stated in the Proposal for the number of catch basin adjustments approved for payment shall constitute full payment for all work done under this Bid Item.

PART XXIV – BID ITEM NO. 24 – SUPPORT OF UTILITIES CROSSING EXCAVATION TRENCH

BID ITEM NO. 24A – SUPPORT OF UTILITIES CROSSING EXCAVATION TRENCH – 4" TO <8" DIAMETER UTILITY
BID ITEM NO. 24B – SUPPORT OF UTILITIES CROSSING EXCAVATION TRENCH – 8" OR > DIAMETER UTILITY
BID ITEM NO. 24C – TEMPORARY TIGHT SHEETING FOR UTILITY SUPPORT

24.01 SCOPE OF WORK

A. The Contractor shall furnish all labor, materials, tools, equipment and incidentals required to furnish, place, and remove temporary supports of utilities crossing the trench excavation for the main sewer or for laterals.

B. The support of a utility is the act of supporting one or a group of utilities together crossing the excavation and shall include all the individual horizontal and vertical support components (system) necessary to provide the support.

C. Temporary tight sheeting included in this description shall be for the purpose of utility support only.

24.02 MEASUREMENT AND PAYMENT – BID ITEM NO. 24

BID ITEM NO. 24A – SUPPORT OF UTILITIES CROSSING EXCAVATION TRENCH – 4" TO <8" DIAMETER UTILITY
BID ITEM NO. 24B – SUPPORT OF UTILITIES CROSSING EXCAVATION TRENCH – 8" OR > DIAMETER UTILITY

A. Measurement for payment shall be for each support system crossing the excavation which is supported as required by the utility agency and approved by the Engineer. No payment will be made for support of utilities less than 4" in diameter.

BID ITEM NO. 24C – TEMPORARY TIGHT SHEETING FOR UTILITY SUPPORT

B. Measurement for payment shall be for the number of square feet of temporary tight sheeting installed as required by the utility agency and approved by the Engineer

as measured from the existing surface to the bottom of the excavation or the original rock surface, whichever is higher, and the horizontal length required by the utility agency.

PART XXV – BID ITEM NO. 25 – DOWNTIME (DIRECTED BY OWNER)

25.01 SCOPE OF WORK

A. The work of this item is defined as the period of time when the Contractor is directed by the Owner to temporarily stop work (downtime) for the Owner's conveniences. The period of time will be as determined by the Owner. The downtime shall include all labor and equipment utilized on the project site.

25.02 MEASUREMENT AND PAYMENT – BID ITEM NO. 25

A. Measurement for payment shall be the number of hours, to the nearest one-half of an hour. The Owner shall determine the number of hours measured.

B. Payment of the unit prices per hour as stated in the proposal for the work completed and approved for payment by the Engineer shall constitute full payment for all work done under this item.

PART XXVI – BID ITEM NO. 26 – MOBILIZATION (DIRECTED BY OWNER)

BID ITEM NO. 26A – MOBILIZATION (DIRECTED BY OWNER)
BID ITEM NO. 26B – LESS THAN 4 HOURS MOBILIZATION (DIRECTED BY OWNER)

26.01 SCOPE OF WORK

This work is defined as a condition when the Owner directs the Contractor to mobilize materials and equipment from a project site where work is being performed to a second project site to perform work for the convenience of the Owner. Mobilization means the act of transporting materials and equipment from one project site to another.

Under normal circumstances, the Contractor will be provided a Work Order from the Owner that will provide for greater than twenty-four (24) hours for mobilization. In those cases, NO MOBILIZATION will be paid to the Contractor for mobilization of materials, equipment, and work force. However, during emergency situations, the Owner will reimburse the Contractor for mobilization to the site in less than 4 hours, all labor, materials, and equipment, required and preparation to begin the necessary emergency repairs.

26.02 MEASUREMENT AND PAYMENT – BID ITEM NO. 26

BID ITEM NO. 26A – MOBILIZATION (DIRECTED BY OWNER)

A. Measurement for payment shall be the number of hours, to the nearest one-half of an hour, for the transport of materials and equipment from one project site to a second site plus the return of equipment to the initial site. The Owner shall determine the number of hours measured for each mobilization.

B. Payment of the unit prices per hour as stated in the proposal for the work completed and approved for payment by the Engineer shall constitute full payment for all work done under this item.

BID ITEM NO. 26B – LESS THAN 4 HOURS MOBILIZATION (DIRECTED BY OWNER)

A. Measurement for payment shall be the number of emergency mobilizations (less than 4 hours), as ordered by the Engineer.

B. Payment of the unit prices per emergency mobilization as stated in the proposal for the work completed and approved for payment by the Engineer shall constitute full payment for all work done under this item.

PART XVII – BID ITEM NO. 27 – CONTINGENT ITEMS

27.01 SCOPE OF WORK

A. The Contractor shall furnish all labor, materials, tools and equipment required to perform unspecified additional work as determined in the field and authorized in writing by the Engineer. An allowance of $5,000 has been established in this contract.

27.02 MEASUREMENT AND PAYMENT – BID ITEM NO. 27

A. Measurement for payment shall be the actual work performed and approved for payment by the Engineer.

B. Total payment for this item shall be based on the unit and lump sum prices stated in the Contingent Item List or at negotiated costs for the type of actual amount of unspecified work performed and approved for payment.

PART XVIII – INTENT OF SPECIFICATIONS

28.01 SCOPE OF WORK

A. It is the intent of these Specifications and the various Bid Items to obtain a complete installation, as shown in the Details and in the Work Orders. The Contractor shall include in the unit and lump sum prices stated in the Proposal the cost to furnish, install and

perform all work required for a complete installation, whether or not every item of work involved to secure such an installation is specifically mentioned.

SECTION 02100 – PART I – CLEARING AND GRUBBING

PART I – GENERAL

1.01 SCOPE OF WORK

A. The Contractor shall clear and grub in the areas required for construction and remove all debris resulting from the work. The Contractor shall confine his operations within the limits indicated on the Plans, including limits of easement lines and right-of-way, and shall not enter any area outside these limits without prior written consent of the Owner or Engineer.

B. Existing features, trees and vegetation to remain shall be protected, and if damaged or destroyed, shall be repaired or replaced in kind at the Contractor's expense.

PART II – PRODUCTS – NOT APPLICABLE

PART III – EXECUTION

3.01 CLEARING AND GRUBBING

A. Except as otherwise directed, cut, grub, remove and dispose of all trees, stumps, brush, shrubs, roots and any other objectionable material within the limits defined on the Drawings. All stumps, brush and roots shall be grubbed and removed from areas to be occupied by buildings, structures, roads, pipelines and any other areas if designated by the Engineer.

B. After interfering vegetation has been removed, the Contractor shall strip any and all topsoil from the area to be excavated and stockpile it for future use.

C. Trees and foliage designated by the Engineer to remain shall be protected from damage by erecting suitable barriers, or by other approved means. Clearing operations shall be conducted in the manner to prevent falling trees from damaging trees designated to remain or other existing features.

D. Where it is necessary to cut branches of trees which are to remain, the cut shall be made flush with trunk or larger branch, with care being taken to prevent tearing and bark beyond the cut. An acceptable commercial tree paint shall then be applied over cut or damaged areas.

E. Areas outside the limits of clearing shall be protected and equipment or materials shall not be stored or allowed to damage these areas.

F. Stumps, trees, limbs or brush shall not be buried in any fills or embankments or disposed of in any stream corridor, wetland or any surface.

SECTION 02100 – PART III

3.02 DISPOSAL OF MATERIALS

A. All tree trunks, limbs, roots, stumps, brush, foliage and other vegetation shall be removed and promptly disposed of by the Contractor off the project site, in a manner satisfactory to the Engineer.

B. Burning shall not be permitted as a means of disposal. Other means such as chipping, burying (in approved areas), and salvage of marketable lumber shall be employed.

C. Dumping of spoil material into any stream corridor, wetland, flood plain or surface water is prohibited. The Contractor shall dispose of such material strictly adhering to all applicable Federal, State, and Local Laws and Regulations.

D. The Contractors are advised that all existing sanitary sewer pipe removed during the construction of this contract must be disposed of at any approved NYSDEC landfill site. Further that any contaminated earth and/or bedding material around the existing sanitary sewer must also be disposed of in a similar manner.

SECTION 02150 – SITE DEWATERING SYSTEMS

PART I – GENERAL

1.01 SCOPE OF WORK

A. The Contractor shall furnish all labor, materials, and equipment required to successfully dewater the project site to allow for the construction of the scheduled improvements.

B. The General Contract Conditions are part of this specification and the Contractor is to consult this section for construction pertaining to work as described herein.

PART II – PRODUCTS

2.01 EQUIPMENT

The Contractor shall provide all pumping equipment, pipe, stone, fabric, machinery and other necessary items required to operate and maintain the dewatering system throughout the construction of the project.

PART III – EXECUTION

3.01 PREPARATION

A. The Contractor shall conduct a thorough on-site investigation to become familiar with the ground water conditions at the site. Further, the contractor shall refer to the information contained in the subsurface investigation report. Based on the Contractor's findings employ the proper procedures needed for the dewatering of the excavations and/or project site.

B. The Contractor shall investigate and become familiar with all Local, State and Federal Regulations which govern in this matter. The Contractor shall apply for and obtain the necessary discharge permits for the dewatering system at the Contractor's own expense. Determining permit requirements shall be the responsibility of the Contractor.

C. The Contractor shall examine adjacent structures and utilities, both existing and under construction, for possible settlement, movement or other adverse effects resulting from dewatering methods or water removal. Take necessary precautionary steps to protect such structures and utilities.

D. Should the drawdown of groundwater levels by removal or dewatering systems critically reduce or disrupt public or private water supplies, the Contractor shall be prepared to:

1. Provide at his expense adequate potable water to the Owners or users of the affected water supplies under groundwater levels have recovered, so as to sufficiently restore those deficient water supplies.

2. Provide to the Engineer documentation to confirm that temporary water supplies meet the requirements of Local, State and Federal regulatory agencies.

3.02 REMOVAL OF WATER

A. The Contractor shall assume total responsibility for site, surface and subsurface drainage. Maintain such drainage as specified herein during the life of the contract.

B. The Contractor shall supply all supervision, labor, material, equipment, including standby equipment, necessary to maintain a dry excavation as may be needed to construct the project.

C. The Contractor shall maintain groundwater in or below the bearing strata at a safe level at all times by methods which prevent loss of fines, which preserves the undisturbed state of subgrade soils and which sufficiently lowers the groundwater level in permeable strata at or below excavation and fill levels such that blowing or unstable conditions do not develop in the bottom or sides of excavation or fill areas.

D. The Contractor shall protect all adjacent structures, existing and under construction, from settlement, floatation, damage or other adverse effects resulting from water removal or dewatering methods.

E. The Contractor shall install all drains, ditching, sluiceways, pumping and bailing equipment, wicking, sumps, wells, well points, cutoff trenches, curtains, sheeting and all other equipment and structures necessary to create and maintain a dry excavation and a groundwater level at a minimum of 2 feet below excavation subgrades.

1. As part of any dewatering system, observation wells or piezometers shall be provided and installed, as required, to effectively and efficiently monitor drawdown to required levels.

F. The Contractor shall direct all discharged water removed from the site to a sedimentation pond with an outfall to natural water courses, storm drains or channels.

1. Large quantities of water shall not be discharged as overland flows. Overland flow is not permitted onto private property.

2. No unpolluted water shall be discharged to sanitary sewers.

3. Wastewater shall be disposed of in a manner satisfactory to the local Public Health Officer.

G. The dewatering operations shall cease when all foundations, structures, pipe installations and other excavating areas have been properly backfilled and compacted, and are safe from damage, floatation, settlement and displacement.

H. If well points or wells are used, they shall be adequately spaced to provide the necessary dewatering and shall be sandpacked and/or utilize other means to prevent pumping of fine sands or silts from the subsurface. A continual check by the Contractor shall be maintained to ensure that subsurface soil is not being removed by the dewatering operation.

I. Construction of temporary facilities to dispose of water shall be incidental to the construction and shall be performed at no additional cost to the Owner.

J. Permanent piping systems shall not be incorporated in the dewatering system.

3.03 MAINTENANCE OF SYSTEM

A. The Contractor shall operate and maintain dewatering and removal operations on a 24-hour basis for the time required to complete that portion of the work which requires dewatering prior to its construction and which requires protection from floatation or displacement of such work until proper backfilling and compaction is completed.

3.04 REMOVAL OF DEWATERING SYSTEM

A. After groundwater levels have returned to elevations appropriate for conditions and time of year, without causing damage to the work, the Contractor shall remove all dewatering equipment and related equipment from the site and restore site to original conditions or rehabilitate site to meet requirements of Contract Documents.

SECTION 02200 – EARTHWORK

PART I – GENERAL

1.01 SCOPE OF WORK

A. General

The Contractor shall furnish all labor, materials, tools, equipment, services and incidentals necessary to perform all earth and rock excavation, ground water control, sheeting and shoring, backfilling, compacting and grading for all structures, pipelines and utilities.

B. Site Grading

1. The Contractor shall perform all grading work indicated on the Plans or specified. The surface area of the site, including all excavations, cuts, fills and embankments, shall be finished to the lines, grades, and cross-sections shown on the Plans, and shall be cleaned of all loose material.

2. Erosion control procedures, inclusive of mulching, shall be utilized along the right-of-way and access roads. Erosion control shall occur as required and immediately following (weather permitting) completion of sewer construction.

C. Site Investigation

1. It shall be the Contractor's responsibility to investigate the actual conditions existing at the site. No extras will be allowed for any excavations, imported fill, disposal of excess excavated material or material unsuitable for grading, nor for any conditions which would have been foreseen by thorough examination of the site, the Plans and Specifications.

D. Excavating and Backfilling

1. The Contractor shall perform all excavation for the installation of the work under his Contract including all trenching, backfilling, grading and embankment work to the lines and grades indicated on the Plans, herein specified, or ordered by the Engineer. The work shall include but not be limited to excavation for the structures, footings, manholes and chambers, pipes, ducts, roadways, pavements and ditches; all bedding, backfilling and fill materials; embankment construction, protection of excavations, structures and utilities above and below grade requiring sheeting, shoring and bracing; handling of water, including pumping and bailing; dewatering as required; restriction of surfaces; filling unauthorized excavations, disposal of surplus materials and all incidental work.

2. The Contractor shall assume the risk of encountering and shall include the cost of (unless specifically included in a bid item) removal of quicksand, hardpan, boulders, rock, clay, rubbish, unforeseen obstacles, underground conduits, gas pipe, drain tile, trees, roots, timber, concrete slabs, or masonry structures, pavements and sidewalks and the delay or damage occasioned by same, whether or not these obstacles are shown on the Contract Drawings. No claim beyond the contract price of the work will be allowed due to the character of the ground in which the excavation is made.

3. At intersections and elsewhere, where there are existing services, such as water mains, gas lines, electric conduits, etc., the Contractor shall uncover said pipes and structures a sufficient time in advance of the construction of the proposed work to definitely determine the liens and elevation of the existing structures with reference to the new work so that, if required, change in line and/or grade can be made in the new work. The Contractor shall be responsible to advise all utilities and agencies of the extent, scope and schedule of his operation.

4. Where waterlines are close (10 feet or less) to proposed sewers, the Contractor shall comply with the provisions of the Ten State Standards, (1997 Edition or latest) as stipulated in the section "Relation to Water Mains".

5. The Contractor shall be responsible at all times for carrying out excavation and trenching work in a safe and prudent manner to protect the workmen and public from unreasonable hazard, and conform to the Williams-Steiger Occupational Safety and Health Act of 1970 (as amended), Public Law 91596, Part 1518 Safety and Health Regulation for Construction, and/or the New York Department of labor Industrial Code Rules, whichever is stricter. All applicable local, State and/or Federal requirements shall be observed, and necessary permits acquired by the Contractor.

E. Definitions

1. The term "unclassified excavation" as herein defined shall be construed to mean all classes of material, wet or dry, and shall include so-called muck, hardpan, soft shale or slate, loose disintegrated or decomposed ledge rock, old macadam, topsoil, sod, masonry, all material requiring drilling and blasting, sledging, barring or wedging for removal from their original beds and specifically includes all ledge or bed rock and boulders.

1.02 RELATED WORK SPECIFIED ELSEWHERE

A. Clearing and Grubbing as specified in Section 02100.

B. Sheeting, shoring and bracing as specified in Section 02250.

C. Steel Sheeting as specified in Section 02260.

D. Site drainage and dewatering as specified in Section 02150.

1.03 PRODUCT DELIVERY, STORAGE AND HANDLING

A. Excavated Material

1. Excavated materials to be reused shall be stored in locations that will not interfere with construction operations.

2. Unsuitable and surplus excavated material and debris shall be disposed of by the Contractor at his own expense outside the limits of the project site. Disposal shall be in accordance with Section 02100, Clearing and Grubbing, 3.02.

1.04 JOB CONDITIONS

A. Protection of Property

1. Necessary arrangements shall be made by the Contractor with all persons, firms and corporations owning or using any poles, pipes, tracks or conduits, etc., affected by the construction included under this Contract to maintain and protect such facilities during construction. The cost of any such protection shall be paid by the Contractor.

2. Excavated materials shall be deposited only in designated areas. The Contractor shall avoid depositing excavated material on pavements, sidewalks or grass plots, except with written authorization, and then only when adequate temporary provisions have been made for passage and protection of pedestrians and vehicles. Adequate bridging and planked crossings must be provided and maintained across all open trenches for pedestrians and vehicles.

3. The Contractor shall shore up or otherwise protect all fences, buildings, walls, walks, curbs or other property adjacent to any excavation which might be disturbed during the progress of the work. The Contractor shall be liable for any damage which may result to neighboring property from excavation, backfill or grading operations.

4. In situations where the Contractor is connecting a new pipelines to an existing structure or existing pipeline, the Contractor shall install and maintain a temporary plug in either the new or existing pipeline at the point of connection. The purpose of the plug is to

assure that no water or construction sediment or debris will enter the system. The plug shall remain in place for the entire construction period. Upon acceptance of the new pipeline by the Owner, the Contractor shall make the necessary arrangements to remove the plug.

PART II – PRODUCTS

2.01 MATERIALS

A. Earth Fill

1. Earth fill shall be fine loose material from the excavations, free from trash, frozen lumps, organic substances, rocks over 4 inches in diameter or other materials which cannot be properly compacted. Physical properties shall be such that it can be readily spread and compacted.

B. Select Granular Backfill

1. For Pipe Lines, Chambers and Manholes

a. Select granular backfill shall be run of crusher stone or run of crusher gravel meeting the requirements of the New York State Department of Transportation January 1990 Specifications (Section 304-2.02, Type 4), and meet the following limits:

Sieve Size	Percent Passing by Weight
2"	100%
¼"	30 – 65%
No. 40	5 – 40%
No. 200	0 – 10%

2. For Structures

a. Select granular backfill shall be run-of-bank gravel or well graded crushed stone material acceptable to the Engineer. Maximum size shall not exceed 2 inches in any direction.

C. Granular Foundation Material

1. Granular foundation material shall be well graded crushed stone backfill as approved by the Engineer. The crushed stone shall have a maximum size of 4 inches in any direction unless otherwise indicated on the Plans or specified by the Engineer.

D. Pipe Bedding Materials

1. Unless otherwise indicated on the Drawings, or as directed in the field by the Engineer, pipe bedding material shall be a No. 1 crushed stone which satisfies the following gradation limits as approved by the Engineer.

Sieve Size	Percent Passing by Weight
1"	100%
½"	90 – 100%
¼"	0 – 15%

2. Crushed stone for bedding pipe shall meet all the requirements of New York State Department of Transportation (1990 Edition) Specifications material Designation 703-0201 and shall consist of clean, durable, sharp angled fragments of rock of uniform quality. Crushed stone for bedding pipe shall be obtained from sources conforming to the requirements of the New York State Department of Transportation as to sampling, testing methods, quarry reports and any other required procedures.

E. Structural Base (Undercut Material & Fabric)

1. Unless otherwise indicated on the drawings, or as directed in the field by the Engineer, the structural base of undercut material shall be a crushed stone, satisfying the graduation outlined in NYSDOT Section 703-02, Table 703-4, Size Designation 4 or a crushed stone used in conjunction with a geotextile fabric satisfying the requirements of NYSDOT, Section 304.3.03, Type 1. A further description of the allowed material properties and/or gradation limits for the aggregate and fabric is as follows:

a. Crushed Stone, NYSDOT, Section 703-03, Size Designation 4

Sieve Size	Percent Passing by Weight
4"	100%
3"	90 – 100%
2"	0 – 15%

Sieve Size	Percent Passing by Weight
3"	100%
2"	90 – 100%
¼"	30 – 65%
No. 40	5 – 40%
No. 200	0 – 10%

b. Geotextile Fabric

i. The geotextile fabric shall be of the type appropriate for the intended use as shown on the plans or as ordered by the Engineer. The geotextile fabric shall be a woven or non-woven type, as specified, manufactured by Mirafi, Amoco or equal. The contractor's shop submittal for this item shall contain an original certification from the manufacturer, which indicates the model number of the geotextile fabric and their proposed recommended for the fabric's use in this situation.

2. The geotextile fabric shall be of the type appropriate for the intended use as shown on the plans or as order by the Engineer. The geotextile fabric shall be a woven or non-woven type, as specified, manufactured by Mirafi, Amoco, or equal. The Contractor's shop submittal for this item shall contain an original certification from the manufacturer, which indicates the model number of the geotextile fabric and their proposed recommendation for the fabric's use in this situation.

PART III – EXECUTION

3.01 EXCAVATION

A. General Requirements

1. The Contractor shall scrape and stockpile top soil from the work area prior to the start of excavation. The stockpile material shall be properly staked with hay bales or fabric to control erosion/loss of soil. All topsoil shall be respread in the construction area during final restoration.

2. Excavation shall be made to such widths as will give suitable room for construction of the structures, for forms, sheeting, bracing and supporting, pumping and draining; and the bottom of the excavations shall be rendered firm and dry and in all respects acceptable to the Engineer.

3. Excavation and dewatering shall be accomplished by methods which preserve the undisturbed state of subgrade soils. Subgrade soils which become soft, loose, "quick", or otherwise unsatisfactory for support of structures as a result of inadequate excavation, dewatering or other construction methods shall be removed and replaced by concrete or granular fill as required by the Engineer at the Contractor's expense.

B. Excavation

1. Excavation shall be carried to the depth and dimensions necessary for the proper installation of all work as detailed on the Contract Drawings. Unless specifically directed by the Engineer, excavation shall not be made below the elevations indicated on the

Contract Drawings. Where any unauthorized excavation is made below the grades indicated, the excavations shall be restored to the proper elevation with compacted, well graded granular foundation material, or, if under footings, the heights of the walls or footings shall be increased at no additional expense to the Owner. In any event, the operations necessary to correct an excess of excavation shall meet with the consent of the Engineer. If deemed necessary, concrete instead of granular fill shall be used to correct unauthorized excavations.

2. Per the direction of the Engineer, the Contractor may be required to undercut the excavation to establish a sound base for the pipe and pipe bedding material. In such instances, the contractor will excavate an additional 24 inches (minimum) below the invert of the pipe or as ordered by the Engineer. The Contractor shall then proceed to install the geotextile fabric along the trench bottom. The fabric should be placed loosely with no wrinkles or folds. Successive sheets of fabric should be overlapping the downstream sheet. Once the fabric is in place, the Contractor shall then backfill the undercut area using the structural base granular fill material to the bottom elevation of the pipe bedding material.

C. Trench Excavation

1. The Contractor shall excavate trenches to the depth necessary for proper placing of pipe. The trench width at the crown of the pipe shall be kept to a minimum, allowing only the space necessary for proper pipe laying.

2. The trench width will depend upon the depth, nature of material excavated, and method by which excavation is accomplished. In any case, sufficient clearance around the pipe shall be provided to properly lay the pipe, make the joint, and install and compact the backfill. The minimum width of trench shall be one pipe diameter plus at least 12 inch clearance on each side of pipe.

3. Above the crown of the pipe, the trench shall be kept as narrow as practical, with sides as nearly vertical as consistent with good workmanship and safety. The trench dimensions and procedure of trench excavation shall be subject to the acceptance of the Engineer.

4. The trench shall be opened a minimum distance ahead of pipe laying as accepted by the Engineer.

5. The trench shall be braced, sheeted and dewatered, as required, to provide safe, firm and dry conditions.

6. The Contractor shall exercise care to avoid damage to existing structures, utilities, and pipes in the performance of the work. In locations where the excavation is carried beneath or adjacent to existing structures, utilities, or pipes, the Contractor shall furnish and install sheeting ad bracing as necessary to support such structures, utilities or pipes in their original position, and shall be responsible for any damage caused to such utilities by this work.

7. On all excavations greater than 4'-0" in depth, the Contractor shall utilize a trench sheeting box or standard sheeting, shoring and bracing. The Contractor shall secure the services of a Professional Engineer licensed in the State of New York who shall observe his construction operation and design the proper method of sheeting, shoring, and bracing to be utilized during construction.

8. On all excavations less than 4'-0" in depth, the Contractor shall secure the services of a Professional Engineer licensed in the State of New York who shall analyze the existing conditions with the contractor's method of construction and advise him of the proper method to support his trenching operation.

3.02 BLASTING AND EXPLOSIVES

A. Procedures

1. The Contractor's attention is directed to Section 760 through 765, inclusive, of the General Business Law in regard to blasting. It shall be the Contractor's responsibility to obtain the requirements and written authorization for blasting at least 72 hours in advance from the various utilities, railroads, or other agencies involved.

2. The Contractor shall also obtain the Engineer's written permission before commencing blasting operations. All work in connection with blasting shall comply with the laws, ordinances, applicable safety codes, insurance requirements and regulations relative to the handling, storage transporting and use of explosives, and the protection of life and property.

3. If the Engineer judges that further excavation by blasting may injure or damage adjacent rock, masonry, utility lines, or other structures, the Contractor shall discontinue blasting operations. Rock which is not permitted to be blasted shall be removed by pneumatic hammers or other approved means. Where damage occurs because of the Contractor's operation, the Contractor shall bear all costs of repair, and take additional precautions and safeguards to prevent any further damage.

4. The Contractor shall be responsible for all claims resulting from his blasting operations, and shall save harmless the Owner, the Engineer and their agents and employees, from any and all such claims.

B. Restrictions

1. Blasting shall not be done within three hundred (300) feet of any radio transmitter or radio-frequency emission equipment such as high-frequency welders, and blasting caps shall be kept in tightly closed all-metal cans when in the vicinity of such equipment. Intensity and extent of blasting in the vicinity of any pipe conveying combustible gas shall be subject to restrictions that may be imposed by the Owner of the gas line. Should a sewer, water, petroleum products pipelines or other underground utility intersect a line trench, the rock shall be

removed without blasting for a distance as may be required by the utility of agency having jurisdiction. The ends of finished pipe lines shall be covered or stopped with plank during each blast.

2. Preblast Survey

a. The Contractor shall obtain the Engineer's written permission before commencing blasting operation. All work in connection with blasting shall comply with all laws, ordinances, applicable safety code requirements and regulations relative to the handling, storage, transporting and use of explosives, and the protection of life and property.

b. The Contractor shall control his operations to avoid damage to existing structures from ground vibrations caused by blasting or other operations.

c. The plan of blasting operations and daily reports on drilling and blasting activities shall be submitted in writing to the Engineer for review and record purposes.

d. Neither review by the Engineer of the blast design and techniques nor adherence to the limits of vibration specified herein shall relieve the Contractor of any responsibility for the accuracy and adequacy of the blasting, exercising proper supervision and field judgment, and producing the end results called for in these Specifications.

e. The Contractor shall employ specialist to conduct pre-construction surveys of structures in the vicinity of the work, and to monitor the effects of blasting by obtaining and interpreting seismic records.

i. Preconstruction survey shall be conducted on and reported for all major structures within the influence range of the blasting operations or within a minimum of 300 feet from any blast site. The survey shall consist of a visual inspection and recording by notes and photographs of cracks or other structural damage previously sustained and shall be conducted by a qualified technician under the direct supervision of a Professional Engineer, acceptable to the Engineer. The records so obtained shall be retained in the Contractor's file for at least one year after completion of the Contract. In the event of damage claims, a report on the preconstruction conditions shall be prepared by the Contractor for the particular structures as requested by the Engineer from those notes and photographs.

ii. Blast vibration monitoring by a qualified specialist, acceptable to the Engineer, shall be retained to observe blast vibrations. A blasting seismograph shall be employed to measure ground vibrations near selected typical private and/or public buildings within the range of influence of the blast. Seismograms and records of information pertinent to each blast shall be available to the Engineer. The recorded information shall be adequate to allow determination of the peak ground particle velocity and energy ratio at the seismograph location.

f. Blasting procedures and explosives quantities shall be adjusted so that the ground vibrations in the vicinity of existing structures or structures erected under this Contract are below the levels generally recognized as damage producing. In no event shall blast intensity be so high as to produce peak particle velocities greater than 2 inches per second or energy ratios greater than 1.0 in the vicinity of existing structures.

i. Energy Ratio shall be calculated by the following formula:

E.R. = (3.29FA)2
Where: F = Frequency in cycles per second
A = Amplitude in inches

Total E.R. is equal to the arithmetic sum o the Energy Ratios in three mutually perpendicular planes of motion in the vertical and horizontal directions at any one instant of time.

ii. Particle Velocity shall be calculated by the following formula:

Particle Velocity (v) = A/t
Where: A = Amplitude in inches
t = Time in seconds

Total Peak Particle Velocity is equal to the vector sum of the Particle Velocities in three mutually perpendicular plans of motion in the vertical and horizontal directions at any one instance of time.

g. If the Engineer judges that further excavation by blasting may injure or damage adjacent rock, masonry, utility lines, or other structures, the Contractor shall discontinue blasting operations. In such case, the remaining rock shall be excavated by barring, wedging, or other acceptable means.

C. Preparation

1. The charges used shall not make the excavation unduly large or irregular nor shall they shatter the rock upon, or against which, masonry is to be built, nor shall they be allowed to injure existing structures at the site or in the vicinity thereof.

2. The rock shall be covered with heavy timbers securely chained together, or with woven steel cable mats, so that the area affected by the explosives is positively confined. Any structures or any material surrounding or supporting any structure which is damaged by blasting shall be promptly repaired by the Contractor at his own expense.

D. Removal of Loose Material

After each blast is fired, the Contractor shall thoroughly scale the excavation, and all loose material, which appears to be dangerous to the structure or to workmen, shall be removed and the excavation shall be made safe before the work proceeds. If removal of loose or shattered rock or other loose material enlarges the excavation beyond the required limits, this shall not relive the Contractor of his obligation to make such removal, and he shall not be entitled to additional compensation therefore.

3.03 BACKFILLING

A. Requirements

1. All trenches and excavation shall be backfilled to the original surface of the ground or to such other grades as may be shown on the plans or directed.

2. The method and degree of compacting backfill will be governed by the type of material and the extent to which any subsequent settlement can be permitted.

B. Placement of Fill Material

1. In all backfilling of trenches and around structures, loose lumber, braces, rubbish and refuse shall be removed from the areas to be backfilled.

2. Backfilling shall be done with sound material free from waste, objectionable organic matter, rubbish, boggy or other unsuitable materials. No frozen material shall be used for backfilling.

3. Backfilling shall begin as soon as practicable after structures and pipelines have been installed and inspected. Material for bedding and backfill shall be as shown on the Drawings and as specified. The material shall be firmly compacted below and to points 12 inches above the crowns of conduits and pipelines. Temporary blocking shall not be allowed.

4. Backfill, in areas that are not required to be paved, shall be placed in uniform horizontal layers and shall be tamped, flooded or otherwise consolidated as the work progresses. Lumps of earth shall be broken up and if there are any stones or lumps which cannot be readily broken up, they shall be distributed throughout the mass so that all interstices are solidly filled with fine materials. No stone fragments, over 4 inches in any dimension, shall be placed in the backfill nearer than 2 feet from the pipe or conduit at any point, or from any concrete wall.

5. Backfilling over conduits, pipelines, chambers and manholes, in areas that are required to be paved (in roadways, paved shoulders, aprons, driveways, sidewalks, parking areas, etc.) shall be placed carefully and tamped or compacted with suitable tools. This material shall be placed in layers approximately 6 inches thick, each layers being thoroughly tamped and compacted in place.

In lieu of 6 inch lifts or layers and compacting as described above, the Engineer may approve the use of vibratory compactor-drivers mounted on rubber tire backhoes, to compact backfill. To prevent damage from down pressure and vibration, such equipment shall not be used nearer than 3 feet to existing utilities or to the pipe or conduit that is being installed. The cost of replacement of any utilities or work damaged due to the use of vibratory compactor-driers, shall be paid for by the contractor, and such cost shall be included in the unit and lump sum bid prices for pipe, chambers and manholes. Depending on the impulse force of such vibratory compactors, the Engineer may allow lift thicknesses of 2 to 3 feet. Where, from visual observation, the Engineer concludes that the required compaction may not have been attained, the Engineer may order that the work be stopped and a density test be performed. The cost of delays caused by such interruption of work and the cost of density tests shall be paid for by the Contractor, and such cost shall be included in the unit and lump sum bid prices for pipe, chambers and manholes.

6. Compaction Requirements for Backfill

a. Over Conduit and Pipelines and at Chambers and Manholes in Areas that are Required to be Paved

Backfill in areas that are required to be paved, such as roadways, paved shoulders, aprons, paved gutters, driveways, sidewalks, parking areas and other paved surfaces, shall be compacted to 95 percent of standard proctor maximum density.

b. For Structures

Backfill in areas of concrete slabs, foundations and fill in graded areas shall be compacted to 95 percent for granular materials as indicated on the drawing "Engineered Compacted Fill Detail".

3.04 COMPACTION OF MATERIALS

A. It shall be the Contractor's responsibility to properly place and compact all materials and to correct any deficiencies resulting from insufficient or improper compaction of such materials. The Contractor shall determine the type, size and weight of compactor best suited to the work at hand, select and control the lift (layer) thickness, exert proper control over the moisture content of the material, and other details necessary to obtain satisfactory results.

B. Compaction Equipment

1. The selection of compaction equipment is the Contractor's responsibility, but shall be subject to the approval of the Engineer. Generally, the following shall apply for the type of material to be compacted.

2. Sheepsfoot rollers shall be used to compact clay and glacial till soils. The proper ballasted weight shall be determined such that the feet penetrate to their full length on a loose lift to be placed, and with further passes, compact the layers are required.

3. Pneumatic or vibratory rollers shall be used to compact sands and gravel. Pneumatic rollers shall have operating weights between 2,000 and 3,000 pounds per tire.

4. Smooth steel wheel, pneumatic tired or vibratory rollers shall be used to compact slag, coarse gravel or crushed stone. Smooth steel wheel rollers shall have a minimum weight of 10 tons. Where possible, rock rill shall be compacted using a self-propelled vibratory steel drum roller weighing at least 10 tons.

5. In all cases, loads shall be adjusted to give the most suitable results for the material being compacted. For heavier, or more efficient types of approved compaction equipment, the minimum number of passes required on all portions of each successive layer shall be determined by the Engineer after appropriate field tests to evaluate the efficiency of the equipment have been made. However, layer thickness shall not, under any circumstances, exceed those specified.

6. In confined areas, and adjacent to utilities, compaction shall be made using hand guided mechanical vibratory plate tampers or rollers similar to units manufactured by Kelly Jay Jackson, or Ingersoll Rand. Equipment for compaction of trenches in areas that are required to be paved shall be as outlined in Section 02200-3.03.

3.05 SITE GRADING

A. Grading in preparation for placing of topsoil, planting areas, paved walks and drives and appurtenances shall be performed at all locations indicated on the Contract Drawings, to the lines and grades shown and as directed by the Engineer. All material encountered, of whatever nature, within the limits indicated, shall be removed and disposed of as

directed. During the course of grading, the subgrade shall be maintained in such condition that it will be well drained at all times. When directed, temporary drains and drainage ditches shall be installed to intercept or divert surface water which may affect the prosecution or condition of the work.

B. When access roads are no longer needed, road fill shall be removed and the access area shall be restored. Care should be taken to avoid damage to adjacent vegetation and to prevent the formation of depressions that would serve as mosquito pools.

C. If at the time of grading it is not possible to place any material in its proper section of the permanent structure, it shall be stockpiled in approved areas for later use. No extra payment will be made for the stockpiling or double handling of excavated material.

D. The right is reserved to make minor adjustments or revisions in lines or grades if found necessary as the work progresses.

E. All loose or protruding rocks shall be barred loose or otherwise removed to line or finished grade of slope. All cut and fill slopes shall be uniformly dressed to the slope, cross-section and alignment shown on the Drawings or as directed by the Engineer.

F. Rough grading shall be stopped six inches below final grade and leveled off, and topsoil shall be placed and finished to final grade.

G. The Contractor shall replace all surface material, and restore paving, curbing, sidewalks, gutters, fences and all other items which were disturbed by the construction so that they shall be equal to the original condition.

SECTION 02215 – UTILITY PROTECTION

PART I – GENERAL

1.01 SPECIAL NOTE

The General Conditions, bound herewith, are a part of these Specifications and the Contractor shall consult them in detail for instructions pertaining to the work.

1.02 SCOPE OF WORK

The Contractor shall provide all labor, materials, tools, equipment and services required for the protection, relocation or replacement of public and private utilities as detailed herein.

PART II – PRODUCTS

2.01 GENERAL

The Contractor shall include in his bid, under the appropriate Bid Item, the costs for the relocation or replacement of existing utilities as called for on the Plans.

2.02 PARALLEL UTILITIES

The Owner will be responsible for the costs of any necessary relocation or replacement of public utilities which are parallel or roughly parallel with the line of work and are located within the utility pay zone which shall be 2 feet either side of the pay limit for trench excavation as shown on the Detail Sheets. However, the Engineer may order the protection, by the Contractor, of these utilities, if, in the Engineer's opinion, they may be protected as opposed to being relocated or replaced. The Owner may also, at his option, order the realignment of the proposed work to avoid relocation or replacement of public utilities.

2.03 CROSSING UTILITIES

The owner will not be responsible for any utilities shown on the plans, which cross the line of work at perpendicular angles or other skew angles unless the utility is in direct conflict with the proposed work. In addition, the Contractor will be responsible for all house service lines (water, sewer, gas, electric, telephone and drain) which cross the line of work whether shown on the plans or not. The Contractor must include in his bid costs to cover any extra work required at these crossings.

2.04 CHANGES

Any changes in the work and/or contract price will be completed in accordance with the requirements of the General Conditions.

SECTON 02215 – PART III

PART III – EXECUTION

All utility protection shall be in conformance with all rules and regulations and in no case shall be less than the requirements of the utility company.

All utilities located outside the limits of the utility pay zone shall be protected or replaced at the Contractor's expense.

The Contractor shall be responsible for obtaining any permits required for utility protection, relocation or replacement.

The Contractor shall also be responsible for scheduling all work by the utility owners in accordance with his own work schedule.

In areas indicated on the plans and/or as ordered by the Engineer, the Contractor shall dig test pits for the purpose of accurately locating underground utilities. Those test pits indicated on the plans shall be completed immediately upon receipt of "Notice to Proceed".

SECTION 02250 – TEMPORARY SHEETING, SHORING AND BRACING

PART I – GENERAL

1.01 SCOPE OF WORK

A. The Contract Drawings and Specifications represent the finished structure. Unless otherwise indicated, they do not indicate the method of construction. The Contractor shall provide all measures necessary to protect, but not limited to, the following:

1. existing utilities in their original position
2. existing structures in their original position
3. workmen or other persons
4. prevent lateral movement of earth adjacent to excavations
5. maintain the width of excavation as indicated on the Drawings.
6. protect construction equipment adjacent to the excavation
7. protect adjacent new work

The Contractor, at his own expense, shall engage properly qualified Professional Engineers registered in New York State to determine where, and how, temporary precautionary measures shall be used and inspect same in the field. Observation visits to the site by the Project Engineer's Field Representative shall not include inspection of the above items. Designs shall take into account the Contractor's program for dewatering.

The Contractor shall supervise and direct the work and he shall be solely responsible for all construction means, methods, techniques, sequences and procedures including maintenance and removal. As a part of his responsibility, the Contractor shall retain the services

of a licensed Structural Engineer other than the Owner's representative to design and supervise the above work.

B. The Contractor shall control his operations to avoid damage to existing structures from ground vibrations caused by blasting, pre-driven sheeting or other operations.

C. ALL OPEN EXCAVATIONS OF DEPTHS GREATER THAN 4'-O" AS MEASURED FROM THE SURFACE SHALL BE SHEETED, SHORED AND BRACED. All sheeting, shoring and bracing shall conform to the provisions of the Williams-Steiger Occupational Safety & Health Act of 1970 (a amended), Public Law 91596 – Part 1518 – Safety & Health Regulation for Construction and/or the New York Department of Labor Industrial Code Rules, whichever is more strict.

D. Bracing, sheeting, and shoring shall be so arranged as not to place any stress on portions of completed work until the construction has proceeded far enough, in the opinion of the Contractor's Engineer, to provide ample strength. If the Contractor's Engineer is of the opinion that the sheeting or supports furnished are inadequate or unsuited for the purpose, he may order additional sheeting or supports to be installed at no added cost to the Owner. Whether so ordered by the Contractor's Engineer or not, sufficient sheeting or supports shall be installed to protect the work from any damage to new or existing structures.

E. Waling and bracing shall be provided as a part of the work under this item.

F. A copy of all sheeting, sheet piling and bracing systems shall be submitted to the Project Engineer for his use and information before installation of same. Each sheet shall display and seal and signature of a licensed New York State Professional Engineer. A copy of this information must also be submitted to the Agency having jurisdiction for review and approval.

G. When pre-driven sheeting is required, the Contractor shall employ specialists to conduct pre-construction surveys of structures in the vicinity of the work, and to monitor the effects of the ground vibrations.

1. Preconstruction survey shall be conducted on and reported for all major structures within the influence range of the sheeting operation or within a minimum of 300 feet from the construction site. The survey shall consist of a visual inspection and recording by notes and photographs or cracks or other structural damage previously sustained, and shall be conducted by a qualified technician under the direct supervision of a Professional Engineer, acceptable to the Engineer. The records so obtained shall be retained in the Contractor's file for at least one year after completion of the Contract. In the event of damage claims, a report on the preconstruction conditions shall be prepared by the Contractor for the particular structures as requested by the Engineer from those notes and photographs.

2. Sheeting vibrations shall be monitored by a qualified specialist, acceptable to the Engineer and shall be retained to observe the pre-driven sheeting operation. A seismograph shall be employed to measure ground vibrations near selected typical private and/or

public buildings within the range of influence of the operation. Seismograms and records of information pertinent to each operation shall be available to the Engineer. The recorded information shall be adequate to allow determination of the vibration.

PART II – PRODUCTS

2.01 MATERIALS

A. Wood sheeting, shoring and bracing shall be if such quality and size that it will not split. Sheeting and bracing shall be Southern Pine, a structural grade, of 1800 psi stress class, and furnished in accordance with the standard rules and grading, dressing and inspection of joints, planks, beams and stringers of the Southern Pine Association. Douglas Fir or other timber of equivalent grade may be substituted. Materials may be either new or used in good condition. Where close or right sheeting is required, wood sheeting shall be tongued and grooved.

B. Steel sheeting shall be manufactured from steel conforming to ASTM Designation A-328, latest revision, and bracing buildings ASTM Designation A-36, latest edition. The sizes and types required may be indicated on the Plans, or if not so shown, steel sheeting shall have a minimum thickness of 3/8 inch in web, unless approved otherwise by the Engineer, and flange shall be as detailed by the Contractor. All necessary welding or supporting members shall be done in accordance with requirements of the American Welding Society Code.

PART III – EXECUTION

3.01 INSTALLATION

A. Shall be installed in accordance to code requirements.

1. All sheeting shall be right and continuous, and driven vertically in place ahead of the excavation by means of steam, vibratory of pneumatic hammers. Any material which stops and driving of sheet piling shall be removed by the Contractor.

2. The sheeting shall extend at least 2 feet above the surface of the ground. If, in the opinion of the Engineer, an excavation will constitute a safety hazard, the sheeting shall extend at least 4 feet above the surface of the ground.

3. As soon as sheeting is placed, if there is a space between the sheeting and the side of the trench, the space shall be backfilled with suitable material thoroughly compacted in place.

4. For additional information on Steel Sheeting, refer to Section 02411 – Steel Sheeting.

B. Removal of Sheeting

1. In general, the sheeting and bracing shall be removed as the excavation is refilled in such a manner as to avoid the caving in of the bank or disturbance of adjacent areas or structures. The voids left by the withdrawal of the sheeting shall be carefully filled by ramming or otherwise, as directed. Permission of the Engineer shall be obtained before the removal of any shoring, sheeting or bracing.

2. Such permission by the Engineer shall not relieve the Contractor from the responsibility for injury to structures, or to other property or persons, from failure to leave such sheeting and bracing in place.

C. Sheeting Left in Place

1. The Engineer may order, in writing, any or all sheeting or bracing to be left in pace for the purpose of preventing injury to the structures or to other property or to personal, whether such sheeting or bracing was shown on the Plans, or placed at his direction, or otherwise. If left in place, such sheeting shall be cut off at the elevation ordered, or shown on the Plans, but in general, such cut off shall be at least 18" below the final ground surface. Bracing remaining in place shall be driven up tight.

SECTION 02300 – STORM SEWERS & APPURTENANCES PART I – GENERAL

1.01 SPECIAL NOTE

A. The General Contract Conditions are part of this Specification and the Contractor is to consult the section for instructions pertaining to work as described herein.

1.02 RELATED WORK

A. Refer to Sections 02100, 02150, 02200, 02250, 02376, 02600, 02800 and 03300.

1.03 SCOPE OF WORK

A. Under this heading, the Contractor shall furnish all labor, material and equipment to install as shown on the Plans the storm sewers, including pipe, fittings, valves, manholes, catch basins and other appurtenances required to complete the work.

1.04 SUBMITTALS

A. The Contractor shall submit a complete set of shop drawings as specified in the General Contract Conditions (Item GCC-17). A shop drawing will be required for all fabricated and/or manufactured material items required by the specifications for this project.

PART II – PRODUCTS

A. All materials shall be new, of first quality, and in first class condition. They shall be of the type and manufacture shown or specified, and substitutions will not be permitted unless written approval is given by the Engineer.

B. All materials shall be transported, handled, stored and installed in the work in such manner as to insure against injury by breakage, cracking or other damage. No such defective material shall be incorporated in the work.

2.01 CONCRETE

A. Concrete for manhole bases, bottoms, waterways and other uses shall be mixed, placed and cured as specified under Section 03310 – Concrete.

2.02 BLOCK (CONCRETE)

A. Concrete block for storm receivers, if such type of construction is called for on the plans, shall conform to the NYSDOT specification 704-03 and shall be in accordance with STM C-140. The block shall be of such length that only full length units are required to place any

one course. Inside and outside joints shall not exceed one-half (1/2) inch. All blocks hall be poured and free from cracks and other defects that would interfere with the proper placing of the block. Storm receiver inlets constructed with blocks shall be parged inside and outside with "Preco-Patch" or equal.

2.03 MORTAR

A. All mortar for laying block shall be composed of one part Portland Cement, one part lime and three parts sand, measured by volume. Prepared masonry mortars of high strength and low volume change, mixed to manufacturer's directions, may be used upon approval by the Engineer.

B. Lime for job mixed mortar shall be high calcium, well slaked quick lime complying with A.S.T.M. specifications C-5.

C. Sand for job mixed mortar shall be composed of hard, durable, sharp particles, clean and free from organic, alkaline or other foreign substances. It shall be uniformly graded from fine to coarse.

D. Portland cement shall conform to A.S.T.M. specification C-150-Type 1.

E. All mortar shall be thoroughly mixed to a uniform color and consistency, and other sufficient quantities shall be prepared at any one time as can be used before initial set takes place. No retempering of mortar will be permitted.

2.04 PRECAST CONCRETE STORM MANHOLES

A. All precast manhole cones and barrels shall be constructed in accordance with the latest ASTM Specification C-478 "Precast Reinforced Concrete Manhole Sections", with the following exceptions: The manhole barrel walls shall be five (5) inches thick for a four (4) foot diameter manhole, six (6) inches thick for a five (5) foot diameter manhole and seven (7) inches thick for a six (6) foot diameter manhole. The upper section of the precast manhole shall be an eccentric cone design having a 24 inch inside top opening diameter with an 8 inch (width) top bearing surface. Where the depth of the manhole is such that an eccentric cone section cannot be used, a flat top section with a 24 inch opening shall be provided. The flat top slabs shall be a minimum of 8 inch thick and shall be capable of supporting a H-20 loading.

B. At the points where the sewer line and branch sewers are connected to the monolithic precast bases or manhole barrels, and annular spaces between the pipes and holes shall be sealed with assemblies consisting of rubber gaskets or links mechanically compressed to form watertight barriers. Such sealing assemblies shall be: RE-SEAL consisting of rubber gasket, cast iron compression flange; Press-Wedge II" gasket or "Watertight Pipe to manhole Rubber Boot Assemble" with stainless steel band clamps as manufactured by Press Seal Gasket Corporation, Fort Wayne, Indiana; Cor-Ten bolt assembly manufactured by the Scales Manufacturing

Corporation of Newburgh, New York; LINK-SEAL consisting of solid synthetic rubber links connected to each other with heavy, elongated washers, bolts and nuts, as manufactured by the Thunderline Corporation of Wayne, Michigan, or equal. After installation, metal parts of the above assemblies that are accessible from inside the manholes shall be coated with compound as specified for manhole barrel joints.

C. In addition to the manhole seals, the Contractor shall provide the special pipe adaptors for the sealing of the exterior pipe ribs which will allow for a watertight seal at the connection to the manhole.

D. The Contractor shall submit to the Engineer for approval details of manhole barrels and cones that he proposes to use. Precast cones shall have a minimum height of two feet, six inches (2'-6") and a maximum height of four (4) feet as shown on the Plans. No penetrating lifting holes will be allowed.

E. The manhole barrel and cone joints shall be concrete with a confined "O" ring, neoprene gasket in accordance with the latest ASTM Specification C-443. The manhole supplier will be required to vacuum test the manhole joint in the factor in the job lots as described in 2.03, all in accordance with the latest ASTM Specification C-443 at a test pressure of 13 psi. The joint test may be performed at the same time as the vacuum test which is described in Section 0259 6-2.03(D). The factor joint test shall be conducted without the joint compound specified below.

F. In addition to the neoprene gasket, each joint shall be buttered prior to assembly with an approved joint compound such as "DeWitt's No. 10", Duralseal 3101, Pioneer 301 or equal compound. The excess shall be removed from the inside and some excess shall be troweled on the outside. The inside joints shall be troweled with "Preco-Patch", or equal.

G. Adjusting grade rings shall not exceed 6 inches in depth. The total number of grade rings shall not exceed 12 inches in height. However, no more than three (3) grade rings will be allowed to be installed. The adjusting ring joints shall be made with an approved cement mortar. The outside of the adjusting rings from casting to cone shall be coated with an approved "Preco-Patch", "Rock Mount", "Waterplug", or equal.

2.05 PRECAST CATCH BASINS (RECEIVERS) AND GRATES

A. The precast basin shall be monolithic reinforced concrete of the type and size shown on the plans. The precast unit shall be capable of supporting an H-20 highway load. The bottom floor of the monolithic precast basin shall have a minimum thickness of 6 inches.

B. The catch basin grates shall be gray iron castings conforming to ASTM A48-83, Class 35B or ductile iron conforming to ASTM A536-80 Grade 65-45-12 or hot dip galvanized steel satisfying NYSDOT Item 655-2.01 and Item 719-01 Type I. All catch basin grates shall be capable of supporting an H-20 wheel load and shall be considered bicycle safe.

The grates and frames shall make firm, full and even bearing on their respective underlying surfaces and shall be non-rocking under the influence of traffic or other loads. The specific size of the grates shall be as shown on the plans and details.

2.06 STORM MANHOLE FRAMES AND COVERS

A. Manhole frames and covers shall be gray iron castings, as detailed on the Plans. The lid shall be lettered "E.C.S.D. STORM" and drilled with four (4) ¾" diameter vent holes as shown on the Plans/Details. Manhole rims shall be set above the adjacent ground level as required. Some manhole covers shall have a locking device as detailed on the Plans and shall be furnished with pentagon bolts. Manufacturer's drawings of all castings which the Contractor proposed to use shall be submitted to the Engineer and approved by him prior to the castings being ordered for the work. No commercial "Brand Names" lettering will be allowed on the exposed surface of the cover. The covers and frames shall be capable of supporting an H-20 wheel load.

B. Watertight frames and covers shall be gray iron castings capable of supporting an H-20 wheel load as detailed on the Plans. Manufacturer's drawings of all castings which the Contractor proposes to use shall be submitted to the Engineer and approved by him prior to the castings being ordered for the work. Watertight frames shall be anchored to the manhole cone section or top slab by a minimum of six (6) ½ inch anchor bolts. Also every watertight frame and cover installation should include a vent stack assembly. The vent stack shall consist of a 4 inch diameter plain end welded steel pipe coated with two coats of light green epoxy paint. The vent assembly shall include heavy duty perforated bird screen, all required fittings and flanged mounting plate, all as detailed on the Plans/Details. The vent stack shall be mounted through a core opening in the manhole and shall be sealed watertight with link seals or other means as approved by the Engineer.

C. In the case where a storm manhole is also functioning as a catch basin, the frame and cover shall be gray iron castings as detailed on the plans. The rim elevation shall le flush with the finished grade of the immediate surrounding area. The casting shall be suitable for highway traffic or H-20 wheel loads of 16,000 lbs. The frame depth shall be a minimum of 9" and the cover openings shall be 1 ¼" as shown on the plans.

2.07 STORM MANHOLE STEPS

A. All manhole steps shall be heavy duty, non-skid type made of cast iron, cast aluminum or steel reinforced co-polymer poly-propylene and shall be placed in the forms while the manhole sections are being cast.

2.08 STORM SEWER PIPE

All storm sewer pipe shall be either:

A. Galvanized corrugated steel pipe made from zinc coated iron or steel sheets conforming in all respects to A.S.T.M. Specification A4444 and A.A.S.H.O. Specification M-218. Galvanized corrugated steel pipe shall be fully asphalt coated, with a double hot dip of bituminous material over the basic galvanizing material, plus a paved invert in the bottom quarter. Pipe shall be 16 gauge.

B. Reinforced concrete bell and spigot gasketed pipe meeting the requirements of Class IV Reinforced Concrete Pipe complying in all respects with A.S.T.M. Specification C-76.

C. High density corrugated polyethylene smooth interior pipe conforming in all respects to the latest ASTM Specifications F-405, F-667, and F-894 and AASHTO (M-294 Virgin Resins). Fittings and couplers shall be manufactured to the same specifications. For pipe diameters up to 24", the pipe couplings shall be watertight and comply with ASTM Standard 3212 at 10.8 psi as outlined in ASTM Standard F-894. The pipe couplings for HDPE storm pipe grater than 24" in diameter shall comply fully with ASTM Standard 3212 as outlined in Standard F-894 at 5 psi. Pipe gaskets shall be a solid ring meeting the requirements of ASTM F-477. The pipe manufacturers shall provide with their shop drawing submittal certification, from an independent certified testing laboratory, attesting to the fact that the pipe supplied meets the pressure testing requirements of the ASTM Standards.

D. Polyvinyl Chloride (PVC) corrugated smooth interior pipe conforming in all respects to the latest ASTM Specifications D-1784, D-2122, and F-949. Fittings and couplers shall be manufactured to the same specifications. The pipe couplings shall be watertight and comply with ASTM Standard D-3212. Pipe gaskets shall be a solid ring meeting the requirements of ASTM F-477. The pipe manufacturers shall provide with their shop drawing submittal certification, from an independent certified testing laboratory, attesting to the fact that the pipe supplied meets the pressure testing requirements of the ASSTM Standards.

2.09 STORMWATER CHECK VALVE

A. The check valve shall be Tideflex TF-2 valve as manufactured by Red Valve Company, Inc. or approved equal. The check valve shall be all rubber with a slip-on connection. The inside diameter of the valve shall be sized to tightly slip over outside diameter of the discharge pipe and secured to the pipe by means of stainless steel clamps. The port area of the valve shall be contour down to the duckbill which shall allow the passage of flow in one direction. The Contractor, along with the manufacturer, shall verify all dimension between the valve and the end second of the discharge pipe to ensure a tight fit.

2.10 STORMWATER FLAP VALVE

A. The flap valve shall be a Series FV-SPR or series FV-AC as manufactured by the Rodney Hunt Company or approved equal. The size of the flap valve shall be as indicated on the drawings. The valve cover shall lb bronze (ASTM B584, C865) and the frame shall be cast iron (ASTM A126, Class B). A resident elastomer seat shall lb firmly bonded to the machined

groove of the cast iron frame to ensure maximum water tightness. The seat shall be made of neoprene or approve equal. The pivot hardware shall be Type 304 stainless steel. The Contractor shall consult the manufacturer on the proper method for installation. All mounting hardware shall be Type 304 Stainless Steel.

PART III – EXECUTION

3.01 PIPE INSTALLATION

A. All sewers shall be laid true to line and grade with bells upgrade. The sections of the pipe shall be so laid and fitted together that, when complete, the sewer will have a smooth and uniform invert. The pipe shall be kept thoroughly clean so that jointing compounds will adhere. Each pipe shall be inspected for defects before being lowered into the trench.

B. Sewer pipe shall be laid in a carefully compacted initial bedding material placed on a flat trench bottom. Bedding shall conform to details shown on the Plans.

C. In laying pipe, the subgrade of the trench shall be carefully formed so that the pipe will rest at the correct line and grade. Line and grade for pipe installation shall be maintained by the use of a laser beam projection system. The laser system shall include ability to set and adjust the grade based on a dial indication. Any proposed alternate system to maintain line and grade shall be submitted to the Engineer and approval obtained prior to use.

3.02 MANHOLE/CATCH BASIN INSTALLATION

A. Manholes/catch basin shall be constructed at the locations shown on the Plans and shall be in accordance with the details shown. Concrete bases shall be placed at proper elevations on a 6 inch stone base.

B. Precast concrete sections shall be carefully lowered into place and accurately positioned. Joints between the bottom slab and bottom section shall be carefully grouted and pointed. All other joints shall be parged with "Preco-Patch" or equal and sealed with an approved ready mixed rubberized asphalt sealing compound.

C. Concrete waterways shall be formed in the bottom of all chambers. They shall be carefully shaped and trowelled smooth and hard with a steel trowel to the contours and grades shown or as directed by the Engineer.

D. Manhole frames and raised catch basin grates frames shall be set on the chambers bearing surface in a ready mixed rubberized asphalt sealing compound to form a continuous seal between frame and manhole of not less than ¼ inch thickness when compressed.

3.03 DROP INLET INSTALLATION

A. The precast concrete drop inlets shall be set on a crushed stone base at least 6 inches deep to proper grade as detailed on the Plans. The unit will also be properly leveled and aligned.

B. The drop inlets constructed of concrete blocks shall be laid in full mortar beds. Mortar that has been stiffened because of evaporation of water may not be retempered Mortar used for filling vertical or inclined joints shall able of such consistency that will require rodding for placing. The mortar shall be rodden until it rises to the top and completely fills the joints.

3.04 STORMWATER CHECK VALVE/FLAP VALVE INSTALLATION

A. The Contractor shall install the valve in accordance with the manufacturer's written installation and operation manual, a copy of which should be provided to the Owner with the shop drawing. The Contractor shall secure the services of an authorized manufacturer's representative to be available for customer service during the installation and to train personnel in the operation, maintenance and trouble shooting of the valve.

B. Upon installation of the valve, the Contractor shall secure a written acknowledgement from the manufacturer certifying that the valve is properly installed per their recommendations.

3.05 TRENCH SHORING/SHIELD

A. Unless otherwise specified on the plans, the Contractor will be required to provide and utilize a trench shield and/or sheeting box on all excavations which exceed 4'-0" depth.

3.06 FINAL INTERNAL INSPECTION OF STORM SEWER SYSTEM

A. The Contractor will be required to provide all labor, equipment and materials required to clean and complete an internal television inspection of the completed storm sewer system. After installation of the pipe and prior to final restoration of the project area, the contractor will be required to clean all debris and sediments from the storm sewer system. Once the pipe and chambers are cleaned, the Contractor shall immediately complete an internal television inspection of the system. The internal inspection shall view and determine the following:

1. The system is free from obstructions, debris and sediment.
2. The pipe sections are free of cracks and defects.
3. The pipe joints are properly coupled and sealed.
4. The pipe (invert) is laid at a consistent grade free of dips and/or high points

5. The installed system shows no signs of leakage.

6. That all lateral drainage connections are properly made and watertight. The location of al the laterals shall be recorded by the Contractor and this information should be provided to the Engineer for inclusion on the record drawings.

The internal television inspection shall be recorded on a VHS tape and a copy of the tape shall be provided to the Engineer. If a system deficiency is noted by the Engineer, the Contractor will be required to immediately clean, replace and/or repair the system at his own expense.

~~SECTION 02350 – FORCE MAIN SEWERS~~

~~PART I – GENERAL~~

~~1.01 SCOPE OF WORK~~

~~A. Furnish all labor, materials, equipment and incidentals required and install in the locations shown on the Drawings, all fore main sewer piping, fittings and incidentals~~ specified herein.

1.02 RELATED WORK

A. Refer to Section 02100, 02150, 02200, 02600, 03300, 15002, 15003 and 15006.

1.03 SUBMITTALS

A. The Contractor shall submit a complete set of shop drawings as specified in the General Contract Conditions (Item GCC-17). A shop drawing will be required for all fabricated and/or manufactured material items required by the specifications for this project.

PART II – PRODUCTS

2.01 DUCTILE IRON PIPE

A. Pipe

1. Unless otherwise specified, all ductile iron pipe shall conform to ANSI/AWWA C151/A21.51, ductile iron pipe centrifugally cast in metal molds or sand-lined molds for water or other liquids.

2. All ductile iron pipe shall be minimum thickness Class 52 (ANSI 21.50) unless otherwise specified and shall be cast in 18 foot laying lengths.

3. The pipe class designation, diameter size, and pressure rating shall be cast or painted on each piece of pipe or fittings.

4. All ductile iron pipe and fittings shall be cement mortar lined and then bituminous painted inside and outside.

B. Fittings

1. Unless otherwise specified, all fittings shall conform to ANSI A21.10, ductile iron fittings.

2. All ductile iron fittings shall be manufactured in classes suitable for the class and size of pipe with which they are intended to be used.

3. All ductile iron fittings shall be cement mortar lined and then bituminous painted inside and outside.

C. Joints

1. All ductile iron pipe and fittings, unless otherwise specified, shall be furnished with push on or mechanical joints.

2. All push on joints, unless otherwise specified shall conform to the following requirements:

a. All push on joint gaskets shall conform to applicable requirements of ANSI A21.11, and shall be designed for the same pressure rating as the pipe or fitting of which it is a part.

b. Gaskets shall be plain rubber gaskets.

3. All mechanical joints, unless otherwise specified, shall conform to the following requirements.

a. All mechanical joints shall conform to applicable requirements of ANSI A21.11, and shall be designed for the same pressure rating as the pipe or fitting of which it is a part.

b. Gaskets: Plain tip

c. Bolts and Nuts: High strength, low alloy steel, fluorocarbon coated as manufactured by Standco Industries, Inc. of Houston, Texas or approved equal.

4. All force main sewers shall require anchorage at each fitting causing a change in direction of 7 ½ degrees or greater. All 24 inch diameter pipe and larger shall be anchored together with either a bolted type or harness ring type and restrained joint. Pipes under 24 inches in diameter may be restrained with 4000 psi concrete blocking or a combination of concrete blocking and mechanical restraint as noted on the Plans.

5. The type of restrained joint to be used shall be approved by the Engineer prior to ordering the pipe.

6. Making the joint and laying the pipe shall comply with applicable sections of the AWWA Specifications except that no sulphur compound type of joint shall be allowed.

D. Insulation

1. Two inch (2") thick closed cell rigid insulation shall be installed above the ductile iron pipe (DIP) force main in the insulated cover areas noted on the Plans.

2.02 POLYVINYL CHLORIDE (PVC) PLASTIC PIPE

A. Pipe

1. Unless otherwise specified, all PVC pipe for force mains shall conform to the latest AWWA C-900 Specification for polyvinyl chloride pressure pipe.

2. All PVC pipe shall be C-900 having a dimension ratio (DR) of 18, unless otherwise specified, and shall be manufactured in 20 foot laying lengths. The pipe shall have a pressure rating of 150 psi and shall have a cast iron equivalent outside diameter.

3. All supplied PVC pipe shall be side marked with the class type, material code (PVC 1120), dimension ratio number, AWWA pressure class, nominal size and outside diameter base dimension.

4. The materials used in the manufacturing of the PVC Pressure Pipe (PVC 1120) shall be made from Class 12454-A or Class 12454-B Virgin Compounds, as defined in ASTM C-1784, with an established hydrostatic design-basis (HDB) rating of 4000 psi for water at 73.4 F (23C).

B. Joints

1. Pipe joints shall be the Fluid-Tite IB (Intregal Bell) push-on type gasketed joint which shall be an integral and homogeneous part of the pipe barrel. The push-on joints and elastomeric gaskets shall conform to the requirements of ASTM D3139 and F477, respectively.

C. Fittings

1. All required fittings shall be ductile iron conforming to the latest edition of AWWA C-100. Fittings shall have mechanical joints and be compatible with the proposed PVC water pipe.

2. All fittings shall be manufactured in classes suitable for the size of pipe and pressure rating as indicated.

3. All bends, tees, valves and other fittings shall be anchored with thrust blocks, as shown and detailed in the plans. Thrust blocks shall be placed against a solid

bearing face of undisturbed material. The concrete shall have a strength of 2000 psi or shall be mixed in the proportions of one (1) sack (94 lbs.) of Portland Cement to 2 ½ cubic feet of loose sand to 5 cubic feet of loose gravel or broken stone. For thrust blocks placed during connection operations, a quick-setting additive shall be mixed into the concrete prior to placement. Where blocking is placed for downward vertical bends or valves the bends or valves shall be strapped to the blocks as shown in the drawings, or as otherwise directed by the Engineer.

D. Insulation

1. Two inch (2") thick closed cell rigid insulation shall be installed above the polyvinyl chloride (PVC) force main in the insulated cover areas noted on the plans.

PART III – EXECUTION

3.01 DUCTILE IRON PIPE – BELL AND SPIGOT (PUSH ON) JOINTS

A. Mechanical Joint Pipe

The contractor shall brush clean the pipe's socket, plain end and gasket with soapy water, then lip gland and gasket over the plain end of the pipe. The small side of gasket and lip side of gland shall face the socket. Insert plain end of pipe into socket and push gasket into position with fingers making sure it is evenly seated. Slide gland into position inserting bolts and tightening by hand. With racheted wrench tighten up bolts in an alternating fashion (top – bottom etc.) pursuant to the manufacturer's recommendations. It shall be noted the contractor is to store all gaskets in an area where a 40 degree F or above air temperature to maintained.

B. Bell & Spigot (Push On) Joints

1. Gasket type bell and spigot piping, unless otherwise specified, shall be installed as described herein. Prior to making up the joint, the inside of the bell, the entire gasket and the spigot end of the joining pipe shall be thoroughly cleaned with soapy water, using a sponge or rag to remove all foreign material. The rubber molded gasket shall then be placed in the bell. Please note all gaskets must be stored in areas where a 40 degree F or above temperature is maintained. Once the gasket is properly seated the gasket and surface of the spigot end of the joining pipe shall be lubricated in accordance with the manufacturer's recommendations. The spigot shall then be centered into the bell until it engages the gasket, and force applied to make the joint. Any deflection shall be taken after the joint assembly has been completed. Force to make the assembly can be supplied by means of a pinch bar applied to wood blocking at he bell end of the joining pipe in diameters of 3 inches to 12 inches. Other mechanical means such as a chain and ratchet shall be used to assemble sizes larger than 12 inches.

3.02 PVC PIPE, LOCKING JOINT

A. Prior to assembly, the coupling matching grooves in the male and female ends shall be wiped clean, then lightly coat the "O" ring male end of the pipe with a lubricant.

B. Immediately after the lubricant is applied, the coupling shall be slipped together until the pipe end seats against the stop.

C. The nylon spline is pushed into aligned grooves around the pipe's circumference, securely locking the pipe to the coupling.

3.03 PVC PRESSURE PIPE (FLUID-TITE IB JOINT)

A. Prior to assembly, clean the bell and spigot ends of the coupling to remove all dirt and other foreign materials.

B. Check the rubber gasket in the bell groove in accordance with the manufacturer's instructions.

C. Apply lubricant to exposed gasket surface and to the pipe spigot up to the full insertion mark.

D. Immediately after the lubricant is applied, insert the spigot end until it is flush with the reference mark.

3.04 TRACER TAPE

A. Magnetic plastic tracer tape (with wire) 3" in width will be required when either Ductile Iron or PVC pipe is utilized. The tracer tape shall be green in color and shall be labeled "Sanitary Sewer". The tape shall be placed 12" below grade and shall be strung along the centerline of the sewer. Splices where needed shall be made in accordance with the manufacturer's recommendation.

B. At completion of the project, and before final payment, the Contractor shall test the entire length of the pipe using pipe location equipment. Test shall be made only in the presence of the Engineer. Any section of tape which is not continuous or is undetectable shall be removed and relaid.

PART IV – TESTING

4.01 PRESSURE

After the sewerage force main has been laid and the joints completed, this newly laid pipe shall, unless otherwise specified, be subjected to a hydrostatic pressure test with a minimum pressure of 1 ½ times the normal operating pressure.

4.02 DURATION

The duration of each pressure test (1 and 2) shall be at least 2 hours.

4.03 PROCEDURE

The pipe shall be slowly filled with water and the specified test pressure, measured at the point of lowest elevation, shall be applied by means of a pump connected to the pipe in a satisfactory manner. The pump, pipe connections, all necessary apparatus, taps into the pipe, gauges, and measuring devices, will be furnished by the Contractor. All work shall be accomplished by the Contractor.

Testing shall be done as soon as the line is completed as determined by the Engineer. All testing shall be witnessed by the Engineer.

4.04 EXPELLING AIR BEFORE TESTING

Before applying the specified test pressure, all air shall be expelled from the pipe. To accomplish this, taps shall be made, if necessary, at points of highest elevation and afterwards tightly plugged.

4.05 EXAMINATION UNDER PRESSURE: TEST NO. 1

All exposed pipes, joints and fittings which are exposed when the test is conducted shall be carefully examined for visible leakage. Those portions of the pipe line covered by backfill shall be walked to observe leakage appearing on the ground surface. Any leaks discovered in the joints shall be corrected until tight. Any cracked or defective pipe, fittings, etc., discovered in consequence of this pressure test shall be removed and replaced by the Contractor, at his expense, with new material as previously specified and the test repeated until satisfactory to the Engineer.

4.06 PERMISSIBLE LEAKAGE: TEST NO. 2

Suitable means shall be provided by the Contractor for determining the quantity of water loss by leakage under normal operating pressure. No pipe installation will be acceptable until or unless this leakage is less than that specified under Division 1.

SECTION 02350 – PART IV

Should any test of pipe laid disclose leakage per mile of pipe greater than that specified in Division, the Contractor shall, at his own expense, locate and repair the defective joints or pipe until the leakage is within the specified allowable.

4.07 LEAKAGE DEFINED

Leakage is defined as a the quantity of water to be supplied into the newly laid pipe necessary to maintain the specified leakage test pressure after the pipe has been filled with water and the air expelled. The allowable leakage is specified in Division 1.

SECTION 02375 – SANITARY SEWERS

PART I – GENERAL

1.01 SCOPE OF WORK

A. Furnish all labor, materials, equipment and incidentals required, and install in the locations shown on the Drawings, all sanitary sewer piping and fittings as specified herein.

1.02 RELATED WORK

A. Refer to Section 02100, 02150, 02200, 02250, 02376, 02600, 02800 and 03300.

1.03 SUBMITTALS

A. The Contractor shall submit a complete set of shop drawings as specified in the General Contract Conditions (Item GCC-17). A shop drawing will be required for all fabricated and/or manufactured material items required by the specifications for this project.

PART II – PRODUCTS

2.01 POLYVINYL CHLORIDE (PVC) GRAVITY PIPE

A. Pipe

1. For pipe diameters 4" thru 15", the polyvinyl chloride (PVC) pipe shall be a single wall pipe conduit as manufactured in accordance with the latest ASTM Specification D-3033 "Type PSP Poly (Vinyl Chloride) (PVC) Sewer Pipe and Fittings" or ASTM Specification D-3034 "Type PSM Poly (Vinyl Chloride) (PVC) Sewer Pipe and Fittings". For pipe diameters 18" thru 27", the PVC pipe manufacturer shall satisfy the requirements, of the latest ASTM Specification F-679, Type I. All pipe shall be SDR-35 or thicker single wall and the PVC Compound shall meet the requirements of the latest ASTM Specification D-1784. Pipe in compliance with these standards shall be clearly marked with pipe size (nominal), cell classification, SDR number, PVC Sewer Pipe and ASTM Designation.

2. AWWA C-900 PVC pipe and fittings shall be installed as a gravity sewer pipe at locations shown on the Plans. The C-900 PVC pipe shall meet the technical specifications of Section 15006.

B. Joints

1. The joint shall provide a permanent seal against exfiltration or infiltration. The joining technique will be with elastomeric gasket.

2. Elastomeric Gasket Joints – The critical sealing dimensions of the bell, spigot and gasket shall be in accordance with the manufacturer's standard dimensions and tolerances. The elastomeric compound shall comply in all respect with the physical requirements specified in ASTM F-477-76. The gasket shall provide an adequate compressive force against the sealing surfaces of the bell and spigot so as to affect a positive seal under all combinations of the joint tolerances. The gasket shall be the only element depended upon to make the joint flexible and watertight. The gasket material shall be oil and gasoline resistant.

C. Fittings

1. All PVC wyes, tees and elbows shall be manufactured in classes suitable for the class of pipe with which they will be used.

PART III – EXECUTION

3.01 LAYING PIPE

A. Pipe

1. All sanitary sewer pipe shall be constructed in accordance with Division 2 of these Specifications.

2. All sanitary sewer pipe shall be bedded as detailed on the Construction Plans and all work shall be in accordance with the various details shown on the Plans.

3. All pipe shall be cleaned before placing, bulkheaded when pipe laying is stopped, and otherwise constructed to secure first class work, free from defects and debris.

4. All sanitary sewers shall be laid true to line and grade with bells upgrade. In laying pipe, the subgrade of the trench shall be carefully formed so that the pipe will rest at the correct line and grade. Line and grade for pipe installation shall be maintained by the use of a laser beam projection system. The laser system shall include ability to set and adjust the grade based on a dial indication. Any proposed alternate system to maintain line and grade shall be submitted to the Engineer and approval obtained prior to use.

5. Pipe used for this project shall be subjected to factory testing at the Owner's option and Contractor's expense. Testing shall be in job lots for a maximum of 6% of pipe quantity or a minimum of 5% of pipe quantity or 2 pieces of each size in each class. Factory

tests shall be hydrostatic or air tests up to 24" and hydrostatic tests for over 24", including all other material tests as specified by ASTM.

B. Wye Branches

The wye branches shall have approved caps or plugs factory installed on the six (6) inch branches for testing purpose. The wye branches shall be bedded and supported as detailed on the Plans.

C. Tee Branches

Tee branches shall only be allowed on PVC AWWA C-900 pipe. Tee branches shall have approved caps or plugs factory installed on the six (6) inch branches for testing purposes. The tee branches shall be bedded and supported as detailed on the Plans.

D. Riser Pipe

1. All riser pipes shall be constructed according to the details shown on the Plans or as ordered by the Engineer in the field.

2. Riser pipes installed in areas where house laterals are not required, or not installed yet, shall have the last length of pipe sealed with a cap or plug. Such caps or plugs shall be wired in place so as to withstand pressures during testing. Compacted No. 1 stone bedding shall be provided to support as shown on the Plans.

E. House Laterals

House laterals shall be 6 inch diameter, at depths of cover varying from up to 8 feet, or as shown on the Plans, at locations to be determined by the Engineer in the field. The type and class of pipe, along with bedding details are shown on the Plans.

F. Markers

A two inch by 4 inch wood marker extending from the tee branch, wye branch, riser or lateral to a point one foot below the ground surface, at each shall be provided.

G. Records

The location of wye branches, tee branches and riser pipes along with laterals shall be measured from the last downstream manhole and in addition, shall be located on a sketch by the use of at least two ties to existing structures, preferably the corners of the house. Such records shall identify the house and laterals by house number; the records shall be kept by the Contractor with three copies delivered to the Engineer within one day after installation. Each

record of a wye branch, tee branch, riser pipe or house lateral shall be on a separate skeet. This information shall be transferred to the as-built tracings by the Contractor.

H. Concrete Cradle and Encasement

Where noted on the Plans or as directed by the Engineer, 2000 psi dry mix concrete shall be placed for bedding and pipe protection. The cradle and encasement details are shown on the Plans. The concrete shall be as specified under Section 03300.

3.02 TRENCH SHORING/SHIELD

A. Unless otherwise specified on the plans, the Contractor will be required to provide and utilize a trench shield and/or sheeting box on all excavations which exceed 4'-0" in depth.

3.03 AIR TESTS, INSPECTION AND INFILTRATION OR EXFILTRATION REQUIREMENTS

A. Requirements

1. After backfilling and prior to the final acceptance of the project, the Contractor will be required to perform the following four tests on all sewers to be built under this project.

a. Air Tests
b. Inspection (Lamping & Internal)
c. Infiltration or Exfiltration
d. Deflection Test (15" dia. and smaller)

2. No more than 1,000 linear feet of installed sewer shall be allowed to remain untested.

3. In view of the fact that house laterals and riser pipes often contribute considerable infiltration, such laterals and risers are to be installed and capped, tied and blocked as the work progresses, and prior to the air testing of the lines.

4. The Contractor's testing procedures shall be completed in accordance with OSHA Standards for confined space entry. The Contractor will be required to provide and operate all equipment necessary for full compliance. Equipment such as gas detectors, safety harnesses, ventilating blowers, respirators etc., shall be provided by the Contractor.

B. Air Tests (Required for All Diameters up to and including 36")

1. The procedures for air testing shall be as specified herein and as ordered by the Engineer. The minimum allowable time for the test pressure to decrease from 3.5 psi to 3.0 psi shall be not less than as called for in the following table:

Minimum Acceptance Times for Length Shown (min:sec)

Pipe Diameter	Up to 100'	100 – 200'	200 - 300'	300 - 500'
6"	2:50	2:50	2:50	2:51
8"	3:47	3:47	3:48	5:04
10"	4:43	4:43	5:56	7:54
12"	5:40	5:42	8:33	11:24
14"	6:36	7:50	11:45	15:40
15"	7:05	8:54	13:21	17:48

Pipe Diameter	Up to 100'	100 – 200'	200 - 300'	300 - 500'
16"	7:33	10:20	15:18	20:41
18"	8:30	12:49	19:14	25:38
20"	9:27	15:54	23:52	31:49
21"	9:55	17:27	26:11	34:54
24"	11:24	22:48	34:11	45:35
27"	14:25	28:51	43:16	57:42
30"	17:48	35:37	53:25	71:13
33"	21:33	43:56	64:38	86:10
36"	25:39	51:17	76:55	102:34

2. Pipe lines in sizes up to 36 inches in diameter can be air tested from manhole to manhole for distances not to exceed 500 feet.

3. In wet trenches where pumping to lower the water table is impractical, approved perforated pipe (with approved cap) shall be placed at each manhole to extend from a point 6 inches below the lowest invert to the top of the ground. Ground water elevations will be measured at each manhole in order to calculate the groundwater pressure acting on the pipe exterior. The initial air test pressure shall be increased as necessary to overcome the calculated groundwater pressure.

4. The testing procedure outlined shall be strictly adhered to during construction.

5. All testing equipment shall be supplied by the Contractor at his expense. For the Contractor's information, some of the major equipment required for air tests is the following:

a. Stop watch graduated in tenths of a second
b. Compressor of 50 to 100 psi capacity
c. Bulkheads for pipe
d. Approximately 100 feet of 3/8" diameter air hose
e. Pressure gauge – 0 to 5 psi graduated in 1/16th of a pound increments
f. Three 3/8 inch diameter check valves.

C. Visual Inspection

1. All sewers under 36" in diameter shall be lamped manhole to manhole prior to final acceptance. The lamp shall have an output of between 250 to 500 candlepower. Lamping shall be performed after the sewer has been flushed and the inside surface wet to allow for light refraction. If fifty percent (50%) of the lamp cannot be seen from the other manhole, the Contractor will be required to televise that section at his expense.

2. All pipes 36" in diameter and larger shall be visually inspected by the Engineer prior to installation. All equipment required for the internal inspection shall be furnished by the Contractor. After installation is totally completed, the Contractor shall complete an internal television inspection of the pipe conduit. The television inspection shall be completed with the Engineer present and the full inspection shall be recorded on a VHS tape. A copy of said tape shall be provided to the Engineer. Some items of inspection are as follows:

a. Pipe free from obstructions and debris
b. Pipe free from cracks
c. Pipe joints properly sealed
d. Pipe invert is smooth and free of sags or high points
e. Hookups, diversions and connections properly made
f. Concrete pipe walls free from structural defects
g. Pipes and joints free from visible signs of leakage
h. Specified coatings properly installed

3. Pipe sections and joints not meeting all of the above requirements shall be replaced or repaired as directed by the Engineer at the Contractor's expense.

D. Infiltration Tests (Applicable Only if Ground Water is Above Pipe)

1. Infiltration tests for all sewers to be constructed under this project shall not exceed 100 gallons per inch diameter pipe mile of sewer, per 24 hours. Each individual

run of sewer (from one manhole to the next manhole) shall comply with the allowable rate of infiltration. All equipment for the test shall be furnished by the Contract.

2. The allowable rate of infiltration given in gallons per mile is not to be constructed as a commitment on the part of the Owner to accept an entire line, where overall infiltration is less than the allowable, while one or more runs contribute excessive infiltration.

3. The infiltration test is intended to measure the water tightness of a sewer, as related to the infiltration of ground water, and, therefore, is only applicable if the water table level is two (2) feet above the top of the pipe.

a. Approved perforated pipe (with an approved cap) shall be placed at each manhole to extend from a point 6 inches below the lowest invert to the top of the ground. Ground water elevations will be measured at each manhole so that the ground water level can be correlated with the infiltration measurements.

b. Before conducting the tests, the water table should be allowed to stabilize at its normal level such that water completely surrounds the pipe during the test period. The test is usually conducted between adjacent manholes with the upstream end of the sewer bulkhead in a suitable manner to isolate the test section. All service laterals, stubs and fittings should be properly plugged or capped at the connections to the test pipe section to prevent the entrance of ground water at these locations.

c. A V-notch weir or other suitable measuring device should be installed in the inlet pipe to the downstream manhole. Infiltrating water is then allowed to build up and level off behind the weir until steady-uniform flow is obtained. When steady flow occurs over the weir, leakage is determined by direct reading consecutively for five (5) days from graduations on the weir and converting the flow quantity to gallons per unit length of pipe per unit of time.

d. An important factor in applying the test criteria is to properly correlate the variable water head over the length of sewer being tested to the high groundwater level. The downstream end of the test section will always be subjected to a greater external water pressure than the upstream end. To compensate for this variable external pressure, the test pressure should be that pressure corresponding to the average head of water over the test section. A minimum of 2 feet of water over the pipe is required at the upper manhole before the infiltration test will be allowed.

4. After the advent of the first wet weather season, and prior to the acceptance of the project, the Owner will require that sections showing excessive infiltration be tested again and defective pipes, manholes, and connections be replaced or repaired at the Contractor's expense.

5. When a sewer run between two consecutive manholes or chambers is found to contribute infiltration at a rate above the allowable, inspection by television or other cameras shall be made by the Contractor and at the Contractor's expense during wet weather, so that the defective section of sewer can be located and repaired. Each individual run of sewer (from one manhole to the next manhole) shall complete with the allowable rate of infiltration of 100 gallons per inch diameter per mile of sewer per 24 hours.

E. Exfiltration Tests

1. The exfiltration test for all diameter sewers shall be as described below. Although actual infiltration will normally be less than that indicated by the water exfiltration test, the test does provide a positive means of subjecting the completed sewer system to an actual pressure test. Since sanitary sewer are not designed or expected to operate as a pressure system, care must be exercised in conducting the test and correlating the results with the allowable exfiltration limit. All equipment required for the tests shall be furnished by the Contractor.

a. The test is usually conducted between adjacent manholes. Prior to the test, all service laterals, stubs and fittings within the test section should be plugged or capped and adequately braced or blocked to withstand the water pressure resulting from the test.

b. If manholes are to be included in the test, the inlet pipe to each manhole should be bulkheaded and the test section filed with water through the upstream manhole. To allow air to escape from the sewer, the flow should be at a steady rate until the water level in the upstream manhole provides an average pressure of 5 psi (11.6' head) at the center point of the test section. If necessary, provisions should be made to bleed off entrapped air during the filling of the test section.

c. Once the test section is filled, the water should be allowed to stand for an adequate period of time to allow for water absorption by the pipe and manhole. After water absorption has stabilized, the water level in the upstream manhole is brought up to the proper test level and this level established by measuring down from the manhole cover or other convenient datum point. After 6 hours, the water elevation should be measured from the same reference point and the loss of water during the test period calculated, or the water can be restored to the level existing at the beginning of the test, and the amount added used to determine the leakage.

d. To exclude both manholes from the test, it is necessary to bulkhead the outlet pipe for the upstream manhole. Provision must be made in the bulkhead for filling the pipe and expelling trapped air.

e. The eater level at the upstream manhole shall be computed and varies above the top of the pipe. Since the sewer is installed on a grade, the test section downstream will be subjected to a greater pressure. Therefore, the test pressure head at the

upstream manhole should be adjusted such that the maximum pressure on the pipe being tested is not greater than 10 psi.

3. When a sewer run between two consecutive manholes or chambers is found to contribute infiltration at a rate above the allowable, inspection by television or other cameras shall be made by the Contractor and at the Contractor's expense during wet weather, so that the defective section of sewer can be located and repaired. Each individual run of sewer (from one manhole to the next manhole) shall comply with the allowable rate of infiltration of 100 gallons per inch diameter per mile of sewer per 24 hours.

F. Deflection Test

All PVC sewers constructed under this project shall be internally checked, no earlier than 30 calendar days after the trenches are backfilled, with a five percent (5%) deflection "go-no-go-pig" to determine if the pipes are deflecting. Any section of pipe unable to pass the "pig test" shall be removed and replaced at the Contractor's expense.

G. Infiltration/Exfiltration Testing of Sanitary Sewer Manholes

Pursuant to Section 02376, the Contractor is required to complete and pass an Infiltration or Exfiltration test on all sanitary sewer manholes installed under this contract. Subject to the approval of the Engineer, the testing of the manholes can be completed jointly with the testing of the installed sanitary sewer pipe. The Contractor is advised to refer to Section 02376, Item 30.2 for the actual testing requirements associated with the sanitary manholes.

3.04 SEPARATION OF WATER MAINS AND SEWERS

A. General

1. Included in the bid prices shall be all costs required to comply with the New York State Department of Environmental Conservation Standard 38.3 for all sewer and water main crossings shown or noted on the Drawings. Any unknown lines to be separated as required by this code shall be an extra to the contract. Costs for complying with this code for 6" house laterals, however, shall be included in the Contractor's bid price for Bid Item No. 10, 6" House Lateral Open Cut.

B. Horizontal Separation

1. Sewers shall be laid at least 10 feet horizontally from any existing or proposed water main. In cases where it is not practical to maintain a 10 foot separation, the appropriate reviewing agency many allow deviation on a case by case basis, if supported by data from the Engineer. Such deviation may allow installation of the sewer closer to a watermain if,

a. It is laid in a separate trench, or if

b. It is laid in the same trench with the water main located at one side of a bench of undisturbed earth, and if

c. In either case the elevation of the top (crown) of the sewer is at least 18" below the bottom (invert) of the water main.

C. Vertical Separation

1. Sewers crossing watermains shall be laid to provide minimum vertical distance of 18" between the outside of the watermain and the outside of the sewer. This shall be the case where the watermain is either above or below the sewer. The crossing shall be arranged so that the sewer joints will be equidistant and as far as possible from the watermain joints. Where a watermain crosses under a sewer, adequate structural support shall be provided for the sewer to prevent damage to the watermain.

D. Unavailable Separation

1. When it is impossible to obtain proper horizontal and vertical separation as stipulated above, the sewer shall be either encased in concrete per the detail on the Plans or constructed using acceptable water pipe, ductile iron or PVC C-900, and pressure tested to assure water tightness. This shall apply to mainline sewers, as well as 6" house laterals.

2. The sewer design outlined in the contract documents will, in most instances, result in horizontal and vertical separations from water mains that are in excess of those stipulated in State Standard 38.3. However, conditions encountered in the field may make it necessary for the Engineer to order such changes, procedures, action and construction as may be necessary to attain compliance with State Standard 38.3. To this end, alignment and depth of the proposed sewer.

SECTION 02376 – SANITARY SEWER MANHOLES

PART I – GENERAL

1.01 SCOPE OF WORK

A. Furnish all labor, materials, equipment and incidentals required, and install in the locations shown on the Drawings, all sanitary sewer manholes as specified herein.

1.02 RELATED WORK

A. Refer to Sections 02100, 02150, 02200, 02375, 02600, 02800 and 03300.

1.03 SUBMITTALS

A. The Contractor shall submit a complete set of shop drawings as specified in the General Contract Conditions (Item GCC-17). A shop drawing will be required for all fabricated and/or manufactured material items required by the specifications for this project.

PART II – PRODUCTS

2.01 POURED IN PLACE BASES

A. The concrete base shall be 4000 psi concrete and the fill forming the invert channel shall be 4000 psi concrete as specified in Section 03300 of these Specifications and both shall be poured in the field.

2.02 PRECAST BASES

A. The precast bases shall be monolithic reinforced concrete, and shall comply with the requirements specified in Section 02376-2.03 for manhole barrels, including gasket joints and approved joint compound.

B. The bottom or floor of the monolithic precast base shall have a minimum thickness of 8 inches, and shall project no less than 6 inches beyond the outside walls of the monolithic precast base to form a flange or annular footing intended to resist uplift.

C. The lowest edges of holes or cutouts for line and branch sewers shall be no less than six inches above the inside surface of the floor or footing of the monolithic precast base. The highest edges of holes or cutouts for line and branch sewers shall be no less than 6 inches from joint surfaces as detailed on the Plans. After installation of the line and branch sewers, manhole channels or inverts shall be formed by using 4000 psi fill concrete as specified in Seton 03300 of these Specifications.

D. At the point where the sewer line and branch sewers are connected to the monolithic precast bases or manhole barrels, the annular spaces between the pipes and holes shall

be sealed with assemblies consisting of rubber gaskets or links mechanically compressed to form watertight barriers. Such sealing assemblies shall be: RES-SEAL consisting of rubber gasket, cast iron compression flange; "Press-Wedge II" gasket or "Watertight Pipe to Manhole Rubber Boot Assemble" with stainless steel band clamps as manufactured by Press Seal Gasket Corporation, For Wayne, Indiana; Cor-Ten bolt assembly manufactured by the Scales Manufacturing Corporation of Newburgh, New York; LINK-SEAL consisting of solid synthetic rubber links connected to each other with heavy, elongated washers, bolts and nuts, as manufactured by the Thunderline Corporation of Wayne, Michigan, or equal. After installation, metal parts of the above assemblies that are accessible from inside the manholes shall be coated with compound as specified for manhole barrel joints.

E. All precast "Doghouse Style" base sections shall be installed on a 12" thick 4000 psi concrete footer pad. The pre-cast wall section shall be set 3" into the poured concrete base pad. After installation of the branch sewer(s), the existing sewer shall be cut with all interior manhole channels or inverts formed by using 4000 psi fill concrete as specified in Section 3300. The area of the cut out around the existing sewer pipe shall be sealed utilizing a hydrostatic non-shrink grout such as "Preco Patch", "Waterplug" or approved equal.

F. The edges of holes or cutouts in riser or barrel sections for line and branch sewers shall be no less than 6 inches from joint surfaces, as detailed on the Plans.

2.03 SANITARY MANHOLE BARREL AND CONE

A. All precast manhole cones and barrels shall be constructed in accordance with the latest ASTM Specification C-478 "Precast Reinforced Concrete Manhole Sections", with the following exceptions: The manhole barrel walls shall be five (5) inches thick for a four (4) foot diameter manhole, six (6) inches thick for a five (5) foot diameter manhole and seven (7) inches thick for a six (6) foot diameter manhole. The upper section of the precast manhole shall be an eccentric cone design having a 24 inch inside top opening diameter with an 8 inch (width) top bearing surface. Where the depth of the manhole is such that an eccentric cone section cannot be used a flat top section with a 24 inch opening shall be provided. The flat top slabs shall be a minimum of 8 inch thick and shall be capable of supporting a H-20 loading.

B. The Contractor shall submit to the Engineer for approval, details of manhole barrels and cones that he proposes to use. Precast cones shall have a minimum height of two feet, six inches (2'-6") and a maximum height of four (4) feet as sown on the Plans. No penetrating lifting holes will be allowed.

C. The precast bases and manhole barrel sections will be required to be vacuum factory testing in job lots per the following schedule. Factory vacuum tests shall be performed on linear footage of manhole barrel job lots as follows:

First test for jobs requiring from 8 ft. to 100 ft. of manholes.
Second test shall be performed on 101 ft. to 300 ft. lots

Third test shall be performed on 301 ft. to 600 ft. lots
Fourth test shall be performed on 601 ft. to 1,000 ft. lots
Fifth test shall be performed on lots over 1,001 ft.

D. Installation and operation of vacuum equipment and indicating devices shall be in accordance with the manufacturer's recommendations and instructions. A test vacuum of 10 inches of mercury shall be drawn. The time for the vacuum to drop to 9 inches of mercury shall be recorded. Acceptance for 4 foot diameter manholes shall be defined as when the time to drop to 9 inches of mercury meets or exceeds the following:

Manhole Depth	Diameter	Time to Drop 1" Hg.
10 feet or less	4'	60 seconds
10 feet to 15 feet	4'	75 seconds
15 feet to 30 feet	4'	90 seconds

For manholes 5' in diameter, add an additional 15 seconds and for manholes 6' in diameter, add an additional 30 seconds to the time requirements for 4' diameter manholes.

If the manhole fails the test, necessary repairs shall be made and the vacuum test repeated until the manholes passes the test.

2.04 JOINTS

A. The manhole barrel and cone joints shall be concrete with a confined "O" ring, neoprene gasket in accordance with the latest ASTM Specification C-443. The manhole supplier will be required to vacuum test the manhole joint in the factory in the job lots as described in 2.03, all in accordance with the latest ASTM Specification C-443 at a test pressure of 13 psi. The joint test may be performed at the same time as the vacuum test which is described previously in Section 01276-2.03 (D). The factory joint test shall be conducted without the joint compound specified below.

B. In addition to the neoprene gasket, each joint shall be buttered prior to assembly with an approved joint compound such as "Dewitt's No. 10", Duralseal 3101, Pioneer 301, or equal compound. The excess shall be removed from the inside and some excess shall be troweled on the outside. The inside joints shall be troweled with "Preco-Patch," or equal.

2.05 ADJUSTING RINGS

A. Grade rings shall not exceed 6 inches in depth. The total number of grade rings shall not exceed 12 inches in height. However, no more than three (3) grade rings will be allowed to be installed. The adjusting ring joints shall be made with an approved cement mortar.

The outside of the adjusting rings from casting to cone shall be coated with an approved "Preco-Patch", Rock Mount, "Waterplug", or equal.

2.06 MANHOLE STEPS

A. Manhole steps shall be forged aluminum alloy, as detailed on the Plans, or steel reinforced co-polymer polypropylene, and shall be placed in the forms while the manhole barrel and cone sections are being cast or securely grouted in place after casting.

2.07 MANHOLE FRAMES AND COVER

A. Manhole frames and covers shall be gray iron castings, as detailed on the Plans. The lid shall be lettered "E.C.S.D. SANITARY" and drilled with four (4) ¾ inch diameter vent holes as shown on the Plans/Details. Manhole rims shall be set above the adjacent ground level as required. Some manhole covers shall have a locking device as detailed on the plans and shall be furnished with pentagon bolts. Manufacturer's drawings of all castings which the Contractor proposes to use shall be submitted to the Engineer and approved by him prior to the castings being orders for the work. No commercial "Brand Name" lettering will be allowed on the exposed surface of the cover.

B. Watertight frames and covers shall be gray iron castings as detailed on the Plans. Manufacturer's drawings of all castings which the Contractor proposes to use shall be submitted to the Engineer and approved by him prior to the castings being ordered for the work. Watertight frames shall be anchored to the manhole cone section or top slab by a minimum of six (6) ½ inch anchor bolts.

2.08 DROP PIPES

Inside Drop Pipe

Inside drop pipes and fittings shall be PVC plastic sewer pipe in compliance with the latest ATM Specification D-2241. Fittings shall be rigid, elastomeric gasket and of the same material as the drop pipe. Suitable unions or adapters shall be provided to connect to other types of piping where necessary. Suitable spacers and anchors shall be provided to adequately attach the drop pipe along the inside of the manhole barrel wall.

2.09 VENT STACKS

The vent stack shall consist of 4 inch diameter plain end welded steel pipe coated with two coats of light green epoxy paint, including heavy duty perforated bird screen, required fittings and 4000 psi concrete, all as detailed on the Plans.

SECTION 02376 – PART III

PART III – EXECUTION

3.01 INSTALLATION

A. Excavation and backfilling shall be done in accordance with the requirements of Section 02200. Temporary sheeting shall be done in accordance with the requirements of Section 02250.

B. The concrete for poured in place bases shall reach a 4000 pounds per square inch minimum compressive strength at 28 days. A minimum of three (3) test cylinders shall be taken for the base pour. One cylinder shall be tested at 7 days, one at 28 days, and one spare. Two copies of the test reports shall be submitted to the Engineer within 5 days of testing, which will be done in accordance with the latest ASME Standards. Cost of testing shall be at Contractor's expense.

C. All manholes and drop manholes shall be set on 6" of No. 1 Crushed Stone compacted to proper elevation.

D. Backfill around pipes at manholes shall be carefully tamped.

3.02 SANITARY MANHOLE TESTING

1. After backfilling and prior to the final acceptance of the project, the Contractor will be required to perform an Infiltration or Exfiltration test on all manholes constructed under this project. The Contractor will be responsible for all labor and equipment costs necessary to complete the test. Also, the Contractor's testing procedures shall be completed in accordance with OSHA Standards for confined space entry. The Contractor will be required to provide and operate all equipment necessary for full compliance
with the OSHA Standards. Equipment such as gas detector, safety harnesses, ventilating blowers, respirators, etc., shall be provided by the Contractor.

2. Before the start of any testing, the ground water table should be allowed to stabilize to its normal level. The Engineer will evaluate the elevation of the ground water to determine if an infiltration or exfiltration test shall be conducted. The Contractor will be required to proceed on the Engineer's final determination. It should be noted that the selected test procedure may vary from manhole to manhole, as it is dependent on the ground water elevation.

3. In areas with a high ground water condition, the Engineer may order infiltration tests for manholes. Where such tests are ordered, the maximum allowable infiltration shall not exceed 100 gallons per inch of internal diameter pipe mile of length per day. Subject to he approval of the Engineer, the testing of the manhole structures can be completed with the testing of the installed sanitary sewer pipe.

4. In areas with a low ground water elevations, the Engineer may order the Contractor to complete a hydrostatic exfiltration test on the manholes. The manholes being hydrostatically tested shall able filled with water from the invert to a point 12 inches above the joint that connects the last manhole barrel section to the tope cone section . Maximum exfiltration shall not exceed 100 gallons per inch of internal diameter per mile of barrel length per day. In lieu of the hydrostatic exfiltration test, the Contractor, subject to the approval of the Engineer, may complete a vacuum test on the manholes.

5. In the case of a vacuum test, the Contractor will be required to follow the manufacturer's recommendation and instructions with respect to the installation and operation of vacuum equipment and the indicating devices. A test vacuum of 10 inches of mercury shall be drawn. The time for vacuum to drop to 9 inches of mercury shall be recorded. Acceptance of 4 foot diameter manholes shall be defined as when the time to drop to 9 inches of mercury meets or exceeds the following:

Manhole Depth	Diameter	Time to Drop 1" Hg.
10 feet or less	4'	60 seconds
10 feet to 15 feet	4'	75 seconds
15 feet to 30 feet	4'	90 seconds

For manholes 5" in diameter, an addition 15 seconds shall be added to the above listed test cycle times. For manholes 6' in diameter, an additional 30 seconds shall be added to the above listed time requirements for 4' diameter manholes.

6. If any manhole fails its test, the Contractor will be required to make the necessary repairs subject to the approval of the Engineer and the test shall be repeated until the manhole passes the test. The Contractor, at his own expense, shall also repair any leaks discovered after testing and/or during the one-year maintenance period.

SECTION 02600 – PAVING AND SURFACING

PART I – GENERAL

1.01 SCOPE OF WORK

A. The Contractor shall furnish and install all paving and surfacing as shown on the Plans and specified herein, and dispose of all excess material.

1. All existing blacktop paved roads which are removed or damaged during the construction shall be repaired and resurfaced.

2. Work under this Section shall not begin until the backfill has been compacted in accordance with Section 02200 of these Specifications and accepted by the Engineer.

3. Final surfacing of bituminous pavements and walks, or pouring of concrete pavements and walks, shall not be performed until all excavation and backfilling which could affect the work has been completed and the heavy construction equipment is no longer required to traverse the areas of proposed pavements and walks.

4. All permits necessary from the Village, Town, County or State Highway Departments shall be obtained and paid for by the Contractor. The terms of the permit shall be adhered to as if they were a part of these Specifications.

PART II – PRODUCTS

2.01 MATERIALS

A. Bituminous Macadam Pavement and Driveways

1. Unless otherwise specified herein, all bituminous macadam materials and work shall conform to the applicable requirements of the New York State Department of Transportation "Standard Specifications", latest Edition.

B. Crushed Stone Road, Driveways and Parking Areas

1. Road materials shall be approved, well-graded crushed gravel or well-graded crusher run stone, known commercially as size – 2" C/R, conforming to the requirements of the New York State Department of Transportation Specifications Section 304-2.02 (Type 2) for the bottom course and Section 302-2.03 (Option C) for the top course.

2. Finish topping material for roads, driveways and parking areas shall be No. 1A or No. 1 crushed gravel or stone as directed and approved by the Engineer.

C. Concrete Sidewalks

1. Sidewalks shall be constructed of 4000 psi concrete as specified in Division 3, Section 03310-2.05.

2. The foundation course material shall conform to the requirements of the New York State Department of Transportation Specification Section 302-1.03 (Option C).

D. Concrete Road and Driveways

1. Roads and driveways shall be constructed of 4000 psi reinforced concrete as specified in Division 3, Section 03310-2.05.

2. Reinforcement shall be welded wire fabric weighing not less than 65 lbs. per 100 square feet with wires equally spaced in each direction, and conforming to he requirements of Division 3, Section 03200, or as directed by the Engineer.

3. The foundation course material shall conform to the requirements of New York State Department of Transportation Specification Section 302-2.03 (Option C).

PART III – EXECUTION

3.01 PREPARATION

A. Sub-grade Preparation

1. After backfilling and grading is completed, the sub-grade shall be shaped and compacted to an even, firm foundation. All unsuitable sub-grade materials, including soft materials, boulders, vegetation and loose stones shall be removed and replaced with well compacted foundation material.

3.02 INSTALLATION

A. Bituminous Macadam Pavement and Driveways – Existing

1. Where existing bituminous pavements or driveways are necessarily required to be cut, the width of pavement required to be removed is shown on the Plans. If the Contractor should remove pavement beyond the Pay Limits shown, he shall replace same at his own expense. In all cases, the pavement will be required to be cut back one foot onto undisturbed earth on each side of the excavation.

2. All work affecting paved roads, streets or highways shall be done in a manner satisfactory to the authority having jurisdiction over the particular pavement.

3. The paving materials and methods of placing shall be in accordance with the Specifications of the New York State Department of Transportation for the particular type of bituminous pavement being replaced.

B. Bituminous Macadam Pavement – New Construction

1. The Contractor shall construct in the locations shown and to the grade indicated, a 16 ½ inch compacted depth pavement.

2. The bottom two courses shall be No. 3 and 4, uniformly graded, crushed stone each compacted to 6 inches in depth. The depth of loose stone in all cases, shall be gauged by the use of cubical blocks of suitable size. The spreading of any layer or course of broken stone shall be done from suitable spreader equipment or from piles dumped along the road as directed by the Engineer. No segregation of large of fine particles will be allowed, but the stone as spread shall be well graded with no pockets of find material. After the bottom course of stone has been laid loose, it shall be thoroughly rolled with an approved roller weighing not less than ten (10) tons.

3. This rolling must begin at the sides and continue toward the center and shall continue until there is no movement of the course ahead of the roller. After the course is thoroughly compacted, No. 1 stone, and screenings, shall be uniformly spread, either by hand labor or by an approved mechanical device, upon the surface and swept in by means of a gang-dragged broom of an approved type and rolled dry. After rolling, the course shall be tested with a line 40 feet in length and any depression over ½ inch in depth shall be satisfactorily eliminated. After the completion of the rolling, no hauling other than the necessary for bringing material for the next course shall be allowed over the rolled material. It is the intention to bind this course with the small stone, but no surplus or filler will be allowed on this course. This course shall not be laid in excess of 500 lineal feet without being rolled and thoroughly filled so as to render it waterproof and thereby prevent the softening up of the subgrade.

4. If the subgrade material shall become churned up into, o mixed with the bottom course through any reason whatsoever, the Contractor shall, at his own expense, remove such mixture of subgrade material and broken stone, and replace it with clean broken stone, of the proper size and shall roll or otherwise compact the material so as to produce a uniform, firm and even bottom course.

5. If hand spreading is used, all filler shall be delivered and piled alongside the road before the course is placed.

6. Over this prepared based course, construct a 4 ½ inch compacted depth two-course, asphalt concrete, consisting of 3 inches (3") of binder course (Type 3) and 1 ½ inch (1 ½") of top course (Type 7F), according to the New York State Department of Transportation Specifications, section 4.01-2.02.

7. After the roadway areas are completed, the Contractor shall string lines along the edges of the pavement and shall trim the edges as required by the Engineer to give a neat edge appearance to the road construction.

8. Slope all roadway area as shown on the Drawings to catch basins so that there are o low spots where water will collect.

9. In general, the new pavement shall be graded to drain as shown on the Drawings. Where new paving work meets existing paving, care shall be taken to provide a neat and smooth transition in a neat and workmanlike manner.

C. Crushed Stone Roadway, Parking Area and Driveway

1. Upon the prepared subgrade, the roadway, driveway or parking area materials shall be placed and compacted to the lines, grades and thickness specified, or as determined by field conditions and ordered in writing by the Engineer.

2. Roadways shall be constructed in two courses or lifts. The maximum subgrade thickness shall be not less than eight (8) inches and a top course thickness of not less than four (4) inches. After the courses are thoroughly compacted, No. 1 stone and screenings shall be uniformly spread, either by hand or by an approved mechanical device, upon the surface and swept in by means of a gang-dragged broom of an approved type and rolled dry.

D. Concrete Sidewalks

1. Foundation

The concrete sidewalks shall be constructed on a four (4) inch compacted stone or gravel foundation course.

2. Forms

Sidewalk forms are to be set upon the foundation course; the top of the form conforming with the walk grade. Forms shall be steel, 4 inches in height or 6 inches in height when traversing driveways and of such length and shapes as may be required to form the required walks. All inside faces shall be clean and smooth, and shall be oiled before the concrete is placed. Forms shall be held in place with pins, or other devices so that during the construction of the walk a straight and even edge shall be maintained.

3. Joints

Sidewalks shall be built with transverse construction joints 5 feet apart or as directed. Joints shall be cut through the slab. Expansion joints ½ inch in width must be cut

through the slab to the foundation every 20 feet or fraction thereof and filled with a bituminous expansion joint.

4. Wire Fabric Reinforcement

Wire fabric (6x6x10 ga.) shall be used in the 6 inch thick sidewalks traversing driveways. The wire fabric shall be placed at the mid-depth point of the slab supported on wire chairs and lapped as required.

5. Placing and Finishing Concrete

After the foundation course has been satisfactorily prepared and after the approved forms are in place to grade, and the same has been checked and approved by the Engineer, the Contractor shall proceed to place the concrete. Concrete of 4000 psi shall be placed to the full depth of the form, carefully spaded, and placed to form a uniform and dense mixture, and leveled off with a template to a smooth surface level with the top of the forms. The surface shall be finished with a float and troweled by skilled workmen. After the surface has been leveled and finished and before the concrete takes its final set, the surface shall be evenly stroked with a broom to give a slightly rough and uniform finish. All outside edges, and the division marks or joints between blocks, shall all be carefully finished with an edging tool with ¼ inch radius.

6. Curing

After concrete is placed and finished, it shall be protected by applying an approved colorless curing compound. This compound shall be applied by pressure spraying at a rate of not less than 1/30 of a gallon per square yard. In lieu of the spraying compound, a covering may be used which meets with the approval of the Engineer.

7. Protecting Work

When the concrete work is finished, the Contractor shall protect the same from the weather, trespasses, or other injurious elements for at least three days, and until the concrete has received a final set. The forms shall remain in place during this curing period. Work placed during cold weather shall be covered.

E. Concrete Driveways

1. Foundation

The concrete driveways shall be constructed on a six (6) inch compacted stone or gravel foundation course.

2. Forms

Driveway forms are to be set upon the foundation course; the top of the form conforming with the driveway grade. Forms shall be steel, 6 inches in height and of such lengths and shapes as may be required to form the required driveways. All inside faces shall be clean and smooth, and shall be oiled before the concrete is placed. Forms shall be held in place with pins, or other devices so that during the construction of the driveway a straight and even edge shall be maintained.

3. Joints

Driveways shall be build with transverse construction joints 10 feet apart or as directed. Joints shall be cut through the slab. Expansion joints ½ inch in width must be cut through the slab to the foundation every 20 feet or fraction thereof and filled with a bituminous expansion joint.

4. Wire Fabric Reinforcement

Same as specified for Section 02600-3.02 D-4.

5. Placing and Finishing Concrete

Same as specified for Section 02600-3.02 D-5.

6. Curing

Same as specified for Section 02600-3.02 D-6.

7. Protecting Work

Same as specified for Section 02600-3.02 D-7.

SECTION 02620 – CURBING

PART I – GENERAL

1.01 SCOPE OF WORK

A. Where existing concrete curbing is necessarily required to be removed, whole sections of the curbing (from joint to joint) shall be removed, and voids filled with poured-in-place concrete curb of the dimensions and shape to match the existing curb. The reconstruction of the curb shall include the necessary porous fill and drain pipe which form the curb structure.

B. Where existing granite curbing is necessarily required to be removed, whole sections of the curbing (from expansion joint to expansion joint) shall be removed and, if possible, reinstalled; or voids filled with new granite curbing of the dimensions, shape, and type to match the existing curb. The reconstruction of the curb shall include the necessary porous fill, concrete foundation, and drain pipe which form the curb structure.

C. All required permits shall be obtained at the expense of the Contractor and the terms of these permits adhered to as part of these Specifications.

PART II – PRODUCTS

2.01 MATERIALS

A. Concrete

1. Refer to Section 03300

B. Granite

1. Granite curbing shall be installed and of the types outlined in New York State Department of Transportation Specification No. 609-3.01, 1985 edition.

C. Porous Fill

1. Porous fill material under the curbing shall be minimum ¾" diameter broken stone, screened to remove excess fine materials. A sheet of tar paper or similar material shall be placed over the fill, upon which the concrete masonry shall be installed.

D. Underdrain Pipe

1. The curbing underdrain pipe shall be 4 inch perforated plastic pipe or of the size and type of the existing underdrain.

E. Expansion Joints

1. Refer to Section 03300 for pre-molded bitumastic type joints, to be utilized for both concrete and granite curb replacement.

PART III – EXECUTION

3.01 INSTALLATION

A. Preparation

The existing curbing, having been previously removed by other phases of the project, shall be replaced in kind. The Contractor shall determine the existing size, shape and type of curbing, and the existence of curb under drain piping. A trench shall be prepared of adequate width and depth to accommodate the porous fill material.

B. Porous Fill

The stone fill material shall be placed so that all areas of both the new and existing curbing will be adequately supported. The top elevation of the placed stone shall be controlled so that the proper curb cross-section can be maintained. The stone shall be covered with a layer of tar paper or equal material to the full width of the new curbing so that concrete cannot fill the voids in the porous fill material.

C. Underdrain Pipe

The plastic underdrain pipe shall be laid to grade and properly bedded in the porous stone material. The pipe shall be connected to the curb receivers, storm manhole, or other drainage pipe or structure as required.

D. Expansion Joints

At 20 foot intervals, at the end of a day's run and/or adjacent to catch basins or receivers, a ¾" expansion joint of pre-molded bitumastic material shall be installed.

SECTION 02800 – RESTORATION

PART I – GENERAL

1.01 SCOPE OF WORK

A. Related Documents

1. The general provisions of the contract, including general and special conditions, apply to the work specified in this Section.

2. Refer to Section 02810, Sodding and Section 02820, Hydroseeding.

B. Description of Work

1. Under the work of restoration the Contractor shall prepare the soil and apply topsoil on unpaved areas, including field areas furnish and apply grass seed, furnish and plant trees and shrubs, furnish and apply gravel on stipulated areas and maintain lawns and plantings for the specified periods, all as required and specified.

1.02 QUALITY GUARANTEE

A. Scheduling Seeding

1. Seeding shall be permitted only between April 15 and May 30 for spring seeding and August 15 and September 15 for fall seeding. No seeding shall be done during high winds or when the ground surface is too wet for proper working.

2. Unless otherwise directed by the Engineer, deciduous material shall be planted from March 1 to May 1 and from October 15 to December 1. Evergreen material shall be planted from April 1 to May 15 and from September 1 to October 15.

B. Plant Guarantee

1. All plants shall be guaranteed for one year or for the duration of one full growing season, beginning after the last planting is complete. At the end of the guarantee period, any dead, unhealthy or badly impaired plants shall be replaced. All replacements shall be plants of the same kind and size. The cost of such replacement shall be borne by the Contractor. Replacements shall be guaranteed for one year after replanting.

1.03 DELIVERY, STORAGE AND HANDLING

A. Deliver grass seed in original containers showing analysis of seed mixture, percentage of pure seed, year of production, net weight, date of packaging and location of packaging. Damaged packages are not acceptable.

B. Deliver fertilizer in waterproof containers or bags showing weight, chemical analysis and name of manufacturer. Federal regulations governing handling and storage of fertilizer must be followed.

PART II – PRODUCTS

2.01 MATERIALS

A. Topsoil

1. Topsoil shall consist of friable, natural earth of loamy character, without admixture of subsoil, uniform in quality and free to refuse of any nature, hard clods, still clay sods, hard pan, pebbles larger than ¼ inch in diameter, course sand, noxious weeds, sticks, brush and other rubbish.

2. When specified, topsoil for backfilling plant pits and planting areas shall be mixed with well-rotted manure in the following proportions:

a. Seven cubic yards of topsoil to 1 cubic yard of manure shall be thoroughly mixed by placing the manure evenly over the topsoil piles and turning the piles at least 3 times or until thoroughly mixed to he satisfaction of the Engineer. The volume of manure will not be considered in the measurement of topsoil.

3. Manure shall be well-rotten horse or cow manure or a combination thereof. It shall contain not over 40 percent of straw or litter and shall be free from fresh manure, sawdust, wood chips, leather hips, tan-bark, long straw, salt hay, stones or chemicals used to hasten decomposition artificially and other foreign or injurious substances.

B. Grass Seed for Lawn Areas

1. Seed shall be fresh, clean, new crop seed composed to the following varieties mixed in the proportions by weight as shown, and testing the minimum percentage of purity and germination indicated:

Name	Proportion By Weight	Purity	Germination
Perennial Manhattan Ryegrass	40%	98%	90%
Kentucky Blue Grass	25%	85%	90%
Annual Ryegrass	20%	95%	90%
Red Fescue-Creeping	15%	95%	90%

2. Special seed mixes may be needed for shady areas or unusually dry areas. Follow recommendation of reputable seed supplier or nurseryman.

C. Grass Seed for Field Areas

1. Seed shall be fresh, clean, new crop seed composed to the following varieties mixed in the proportions by weight as shown, and testing the minimum percentage of purity and germination indicated:

Name	Proportion By Weight	Purity	Germination
Perennial Ryegrass Manhattan or Perofine (Lolium Perenne)	50%	98%	85%
Annual Ryegrass	50%	95%	90%

D. Fertilizer

1. Fertilizer shall be mixed, of commercial quality, with a N-P-K ratio equal to 17-23-6 and 50% of the elements derived from organic sources.

E. Peatmoss

1. Peatmoss shall be horticultural grade Class A decomposed plant material; elastic and homogeneous; free of decomposed wood, sulfur, and iron; PH value of 5.9-7.0; 60% organic matter by weight; and a moisture content not exceed 15%.

F. Gravel

1. Gravel shall be washed bank gravel or river gravel ranging in size from approximately ½ inch up to and including 1 ¼ inch.

G. Steel Edging and Stakes

1. Steel edging shall be made from high grade open hearth, heavy steel strip ½ inch thick by 5 inches wide. Each section of edging shall have pockets or slots pressed into them for the insertion of tapered steel stakes at intervals of 2 feet.

2. Stakes shall be fabricated of the same material as the edging and shall be ½ inch by 1 ½ inch at the top tapering to ½ inch wide at the bottom by 18 inches long.

H. Trees and Shrubs

1. Plant names shall agree with the nomenclature of "Standard Plant Names" as adopted by the American Joint Committee on Horticultural Nomenclature latest edition. Size and grading standards shall conform to those of the American Association of Nurserymen unless otherwise specified.

2. All trees and shrubs shall be nursery grown, at least twice transplanted, and shall have a fully developed fibrous root system typical of the stated species. All trees shall be freshly dug, and if so specified, balled and burlapped immediately before shipping. Trees and shrubs from storage or those not freshly dug will not be accepted.

3. All trees and shrubs shall be true to name, and no substitution in species or varieties will be accepted. The vendor shall label plainly all trees and shrubs with a metal label and shall state the botanical name and size of the respective species on each label. The labels shall be attached firmly and be of such nature as to be permanently legible.

4. All trees shall meet the trunk size designated on the Plans, measured one foot above the ground. Where spread size is designated, limbs shall radiate to the specified diameter to complete the full periphery or circumference measured axially through the tree trunk so as to form a top substantially uniform in weight and density all the way around and typical of the species specified.

5. On trees designated "balled and burlapped" the ball must meet the diameter specified at the tope of the ball and the diameter at the bottom of the ball shall vary not less than 20 percent of the top. The top surface and bottom surface of the ball must be parallel. The ball depth specified must be met at all points perpendicular to the bottom diameter of the ball. (Ball, as used in this specification, connotes the frustrum of a cone.)

6. All shrubs must fulfill dimensional requirements designated in the plant list or on the Plans and must be heavily chained and typical of the stated species.

7. The tree replacement schedule for those trees marked with an "R" on the plans is as follows:

a. For trees less than or equal to 3 inches in diameter, provide new trees of same sizes and species as those replaced.

b. For trees greater than 3 inches in diameter but less than or equal to 8 inches in diameter, provide one (1) 3-inch in diameter tree of same species as those replaced.

c. For trees greater than 8 inches in diameter, provide two (2) 3 inch in diameter trees of same species as those replaced.

d. For trees marked on the plans to be protected or tunneled (T), the Contractor shall provide subsurface tree protection in accordance with the Drawings and as specified herein or as otherwise directed by the Engineer.

I. Miscellaneous Materials

1. Bracing stakes shall be of white cedar, chestnut, or other approved wood. Surface stakes shall measure two inches by four inches for trees braced with three stakes and two inches for trees braced with two stakes. Underground deadman shall be at least four inches by four inches by four feet long. All stakes shall be free from insects and fungi.

2. Wire shall be galvanized steel wire, No. 12 A.S. & W. gauge throughout.

3. Hose shall be fiber centered remnants or suitable second hand material of one inch, five-eights inch or three-quarter inch diameter weighing approximately one-half pound per linear foot, or other suitable material.

4. Jute burlap shall weigh eight ounces per square yard.

5. Material used in wrapping trees shall be jute twine not less than two ply for trees three inches or less in diameter and three ply for trees over three inches in diameter.

PART III – EXECUTION

3.01 INSTALLATION

A. SOIL PREPARATION

1. Topsoil shall be placed on unpaved areas to the limits as shown on the Plans. Seeding, sodding, trees and shrubs shall be furnished, planted and maintained as shown, specified and ordered. Topsoil shall be placed to a minimum depth of 6 inches (as measured after rolling and compaction).

2. Additional topsoil shall be provided in tree and planting areas as required to provide a depth no less than the planting hole depth as herein specified.

3. All topsoil, after uniform grading, shall be thoroughly rolled to provide maximum compaction.

4. After placing the topsoil, the area shall be raked and all stones, rocks, and weeds removed. A suitable commercial fertilizer shall then be evenly applied over the area, at a rate recommended by the manufacturer, and thoroughly raked in.

B. SEEDING

1. After the topsoil has been spread and the final grades established in accordance with the Contract Specifications, the entire area shall be fine graded by discing or

tilling to a depth of four inches. After discing or tilling, the area shall be dragged with a plant float so as to develop a smooth, even surface. Power equipment may be used, but in areas that are too small for power equipment to operate, the above operations shall be done with the use of hand tools.

2. Grass seed shall be sown in two operations and at right angles to each other at the rate of two pounds per thousand square feet in each operation.

3. After the sowing of the seed, the area shall be lightly raked or dragged, and then rolled with a 200 pound roller.

4. After the raking and rolling operations are completed the entire seeding area shall be watered with a fine spray until a uniform moisture depth of 1 inch has been obtained.

5. Wooded and field areas shall be seeded with perennial rye grass at the rate of 100 lbs. per acre.

C. GRAVEL

1. Gravel shall be placed in the areas as shown on the Contract Drawings and to the grades, thickness and elevations as indicated. The surface shall be left smooth and even.

2. Provide steel edging to separate all gravel beds from lawn or planting areas.

D. STEEL GRAVEL EDGING

1. The edging shall be placed as required to form a sharp straight edge between the gravel area and the planting area. The steel edge shall extend approximately ½ inch above the general ground surface.

E. DIGGING FOR TREES AND SHRUBS

1. The Contractor shall excavate all plant pits and shall furnish plant, dig, transplant, maintain and replace all plant material as directed by the Engineer.

2. In digging the trees and shrubs with a root ball, minimum lateral diameter of the root ball shall be specified. The root ball shall be of sufficient depth to include all lateral roots. All fibrous and pliable roots encountered in trenching around the ball shall be cut off flush with the outer side of the trench, the ground in the trench loosened with a spading fork, and the flexible roots wrapped against the side of the ball. The root ball shall be firm and compact, tightly and adequately bound with burlap wrapping and tied with a good grade of hay rope or

heavy twine. Under no circumstances shall the root ball be artificially manufactured to meet size requirements, and none will be accepted in a loose, broken or lopsided condition.

3. All trees and shrubs require to be moved with ball and burlap will be measured across the minimum lateral diameter of the root ball.

4. All trees and shrubs required to be dug bare root shall have all the fine fibrous roots preserved. After digging, the bare root plants shall be puddle in a heavy mixture of clay mud, and kept in a moist, but not frozen, condition until planted.

5. Diameter of pits for trees balled and platformed shall be at least two feet greater than the diameter of the ball or spread or roots. Depth of pits for balled and platformed trees shall be six inches deeper than the depth of the ball, or depth of roots. In no case shall it be less than two feet deep.

6. Diameter of pits for bailed and burlapped trees and shrubs shall be at least eighteen inches greater than the diameter of the ball. Depth of pits for balled and burlapped areas shall be six inches deeper than the depth of the ball.

7. Diameter of pits for bare root trees and shrubs shall be at least one foot greater than the diameter of the spreads of roots. Depth of pits for bare root trees and shrubs shall be six inches deeper than the root system.

8. Larger pits may be required. The areas where ground cover plants or annuals are to be placed shall be Rito-tilled at least 4 inches deep.

F. SETTING PLANTS

1. All trees and shrubs shall be set at such level that after settlement, they bear the same relation to the elevation of the surrounding ground as they bore to the ground from which they were dug. All trees and shrubs shall be backfilled with topsoil. Topsoil shall be thoroughly and properly settled by tamping and watering.

2. Balled plants shall be backfilled with topsoil carefully tamped around and under the base of each ball to fill voids. Platforms shall be removed. All burlap, ropes, etc. shall be removed from the tops of the balls but no burlap or wrapping shall be pulled out from under the balls.

3. Bare root plants shall be properly spread out in a natural position and topsoil shall be worked in among them by watering. All broken and frayed roots shall be cleanly cut off.

4. Ground cover plants, annuals and hedges shall be spaced as directed at the time of planting.

G. GUYING AND STAKING

1. Each tree over 2 ½ inches and less than 6 inches caliper shall be firmly anchored after planting by means of three guys, each of two strands of wire anchored to stakes. The stakes shall be two inches by four inches by four feet long and shall be driven 18 inches below the ground at an angle away from the tree.

2. Trees over six inch caliper shall be guyed with deadman and four strands of wire. Deadman shall be buried thirty inches below ground and have 2 inch square by 24 inches long stakes driven at an angle between the tree and the deadman.

3. All trees less than 2 ½ inch caliper shall be anchored by means of two stakes, two inches square by ten feet long, driven into the ground at least two feet and located at a distance of eight inches from the trunk of the tree. Two strands of wire shall be used to secure the tree to the stakes.

4. All guy wires shall be attached to the tree trunk above substantial limbs, one inch diameter or over if possible. The tree trunk shall be protected by a covering of heavy garden hose on the wires at every point of contact with the trees. All guy wires shall be maintained tight by the Contractor for the duration of the Contract.

H. WATER AND MULCH

1. A shallow saucer, capable of holding water shall be formed about each tree and shrub by placing a mound of topsoil around the ends of each pit. The ring shall be made by building a level dam of earth six inches high above the highest point of the ball and graded gradually into the adjacent grades.

2. The well around each plant shall be filled to a depth of two inches with a peat moss mulch.

3. The soil around each plant shall be thoroughly saturated with water at the time of planting, and as many times later as seasonable conditions require for the entire maintenance period.

I. SPRAYING WITH ANTI-DESICCANT

1. The Contractor shall spray all plant material with an anti-desiccant, using an approved power sprayer to apply an adequate film over trunks, branches, twigs and/or foliage, as directed by the Engineer. The anti-desiccant shall be mulsion which will provide a protective film over plant surfaces, permable enough to permit transpiration.

SECTION 03100 – CONCRETE FORMWORK

PART I – GENERAL

1.01 SCOPE OF WORK

A. The Contractor shall furnish all labor, tools, materials, equipment and incidentals required to complete all necessary formwork for this project.

1.02 RELATED WORK

A. Refer to Section 02200 – Earthwork
B. Refer to Section 03200 – Concrete Reinforcement
C. Refer to Section 03300 – Cast-in-Place Concrete
D. Refer to Section 03310 – Concrete – General

1.03 DESCRIPTION OF WORK

A. The extent of formwork is indicated by the concrete structures shown on the Drawings.

B. The work includes providing formwork and shoring for cast-in-place concrete, and installation into formwork of items furnished by others, such as anchor bolts, setting plates, bearing plates, anchorages, inserts, sleeves, frames, nosing and other items to be embedded in concrete (but including reinforcing steel).

1.04 QUALITY ASSURANCE

A. The installer must examine the substrate and the conditions under which concrete formwork is to b performed, and notify the Contractor in writing of unsatisfactory conditions. Do not proceed with the work until unsatisfactory conditions have been corrected in a manner acceptable to the installer.

1.05 CODES AND STANDARDS

A. Unless otherwise shown or specified, design, construct, erect, maintain, and remove forms and related structures for cast-in-place concrete work in compliance with the American Concrete Institute Standard ACI 347, "Recommended Practice for Concrete Formwork".

1.06 ALLOWABLE TOLERANCES

A. Construct formwork to provide completed concrete surfaces complying with the tolerances specified in ACI 347, Section 2.4, after removal of forms and prior to patching and finishing of cast-in-place formed surfaces.

B. Check formwork during concrete placement to ensure forms, shores, falsework, ties and other features have not been unduly disturbed by concrete placement methods or equipment. The surveyor shall report in writing to the Engineer any deviations from the allowable tolerances, with a copy of the report to the Contractor.

1.07 SUBMITTALS

A. Manufacturer's Data – Concrete Formwork

1. For information only, submit two (2) copies of manufacturer's specifications and installation instructions for proprietary materials and items as required, including form coatings, manufactured form systems, ties and accessories.

PART II – PRODUCTS

2.01 FORM MATERIALS

A. Form for Exposed Finish Concrete

1. Unless otherwise shown or specified, construct formwork for exposed concrete surfaces with plastic-face plywood, metal, metal-frames, or other panel type materials acceptable to the Engineer, to provide continuous, straight, smooth exposed surfaces. Furnish in largest practicable sizes to minimize number of joints and to conform to joint system shown on Drawings. Provide form material with sufficient thickness to withstand pressure of newly placed concrete without flow or deflection.

2. Plywood forms complying with U.S. Product Standards PS-1, "B-B (Concrete form) Plywood" Class I, Exterior Grade or better, mill-oiled and edge-sealed, with each piece bearing the legible trademark of an approved inspection agency.

B. Forms for Unexposed Finish Concrete

Form concrete surfaces which will be unexposed in the finished structure with plastic-face plywood, metal or other acceptable material. Provide lumber that is dressed on at least two edges and one side for tight fit.

2.02 DESIGN OF FORMWORK

A. Design, erect, support, brace and maintain formwork so that it will safely support vertical and lateral loads that might be applied, until such loads can be supported by the concrete structure. Carry vertical and lateral loads to ground by formwork system and in-place construction that has attained adequate strength for that purpose. Construct formwork so that concrete members and structures are of correct size, shape, alignment, elevation and position.

B. Design forms and falsework to include assumed values of live load, dead load, weight of moving equipment operated on formwork, concrete mix, height of concrete drop, vibrator frequency, ambient temperature, foundation pressures, stresses, lateral stability, and other factors pertinent to safety of structure during construction.

C. Provide shores and struts with positive means of adjustment capable of taking up formwork settlement during concrete placing operations using wedges or jacks or a combination thereof. Provide trussed supports when adequate foundations for shores and struts cannot be secured.

D. Support form facing materials by structural members spaced sufficiently close to prevent deflection. Fit forms placed in successive units for continuous surfaces to accurate alignment, free from irregularities and within allowable tolerances. Provide camber in formwork as required for anticipated deflections due to weight and pressures of fresh concrete and construction loads for long span members without intermediate supports.

E. Provide temporary openings in wall forms, column forms and at other locations necessary to permit inspection and clean out.

F. Design formwork to be readily removed without impact, shock or damage to cast-in-place concrete surfaces and adjacent materials.

G. Provide formwork sufficiently tight to prevent leakage of cement paste during concrete placement. Solidly butt joints and provide backup material at joints as required to prevent leakage and fins.

H. Side forms of footings may be omitted and concrete placed directly against excavation only when requested by Contractor and accepted by Engineer. When omission of forms is accepted, provide additional concrete required beyond he minimum design profiles and dimensions of the footings as detailed.

PART III – EXECUTION

3.01 FORM CONSTRUCTION

A. General

1. Construct forms complying with ACI 347, to the exact sizes, shapes, lines and dimensions shown, and as required to obtain accurate alignment, location, grades, level and plumb work in finished structures. Provide for openings, offsets, sinkages, keyways, recesses, moldings, rustications, reglets, chamfers, blocking, screeds, bulkheads, anchorages and inserts and other features required. Use selected materials to obtain required finishes.

2. Fabricate forms for easy removal without hammering or prying against concrete surfaces. Provide crush plates or wrecking plates where stripping may damage cast concrete surfaces. Provide top forms for inclined surfaces where the slope is too steep to place concrete with bottom forms only. Kerf wood inserts for forming keyways, reglets, recesses and the like, to prevent swelling and assure ease of removal.

3. Provide temporary openings where interior area of formwork is inaccessible for cleanout, for inspection before concrete placement, and for placement of concrete. Brace temporary openings and set tightly to forms to prevent loss of concrete mortar. Locate temporary openings on forms in as inconspicuous a location as possible, consistent with project requirements.

4. Form intersecting planes to provide true, clean-cut corners, with edge grain of plywood not exposed as form for concrete.

5. Provide openings in forms to accommodate other work, including mechanical and electrical work. Accurately place and securely support items required to be built into the forms.

3.02 FALSEWORK

A. Erect falsework and support, brace and maintain it to safely support vertical, lateral and asymmetrical loads applied until such loads can be supported by in-place concrete structures. Construct falsework so that adjustments can be made for take-up and settlement.

B. Provide wedges, jacks or camber strips to facilitate vertical adjustments. Carefully inspect falsework and formwork during and after concrete placement operations to determine abnormal deflection or signs of failure; make necessary adjustments to produce work of required dimensions.

3.03 FORMS FOR EXPOSED CONCRETE

A. Drill forms to suit ties used and to prevent leakage of concrete mortar around tie holes. Do not splinter forms by driving ties through improperly prepared holes.

B. Do not use metal cover plates for patching holes or defects in forms.

C. Provide sharp, clean corners at intersecting planes, without visible edges or offsets. Back joints with extra studs or girts to maintain true, square intersections.

D. Use extra studs, walers and bracing as required to prevent bowing of forms between studs and to avoid bowed appearance in concrete. Do not use narrow strips of form material which will produce bow.

E. Assemble forms so they may be readily removed without damage to exposed concrete surfaces.

F. Form molding shapes, recesses and projections with smooth-finish materials, and install in forms with sealed joints to prevent displacement.

3.04 FORM TIES

A. Provide factory-fabricated, adjustable-length, removable or snap-off metal form ties, designed to prevent form deflection, and to prevent spalling concrete surfaces upon removal. In addition, for walls subjected to a hydrostatic pressure, provide neoprene water stop form ties.

B. Unless otherwise shown, provide ties so that portion remaining within concrete after removal of exterior parts is at least 1 ½" from the outer concrete surface. Unless otherwise shown, provide form ties which will not leave a hole larger than 1" diameter in the concrete surface.

C. Form ties fabricated on the project site and wire ties are not acceptable.

3.05 CORNER TREATMENT

A. Form exposed corners of walls, beams and columns to produce square, smooth, solid, unbroken lines, except as otherwise shown. "Exposed" concrete is defined as concrete exposed to view in the finished structure, whether painted or unpainted.

B. Form chamfers with ¾" x ¾" strips, unless otherwise shown, accurately formed and surfaced to produce uniformly straight lines and tight edge joints. Extend terminal edges to required limit and miter chamfer strips at changes in direction.

C. Unexposed corners may be formed either square or chamfered.

3.06 CONTROL JOINTS

A. Locate where shown or directed.

3.07 PROVISION FOR OTHER TRADES

A. Provide openings in concrete for work to accommodate work of other trades, including those under separate prime contracts (if any). Size and location of openings, recesses and chases are the responsibility of the trade requiring such items. Accurately place and securely support items to be built into forms.

3.08 CLEANOUTS, CLEANING AND TIGHTENING

A. Provide temporary openings in forms as required to facilitate cleaning and inspection. Thoroughly clean forms and adjacent surfaces to receive concrete. Remove chips, woods, sawdust, dirt or other debris just before concrete is to be placed. Retighten forms immediately after concrete placement as required to eliminate mortar leaks.

3.09 FORM COATINGS

A. Coat form contact surfaces with form-coating compound before reinforcement is placed. Provide commercial formulation form-coating compounds that will not bond with, stain, nor adversely affect concrete surfaces, and will not impair subsequent treatment of concrete surfaces requiring bond or adhesion, nor impede the wetting of surfaces to be cured with water or curing compounds. Do not allow excess form coating material to accumulate in the forms or to come into contact with surfaces against which fresh concrete will be placed. Apply in compliance with manufacturers instructions.

B. Coat steel forms with a non-staining, rust-preventative form oil or otherwise protect against rusting. Rust-stained steel formwork is not acceptable.

3.10 INSTALLATION OF EMBEDDED ITEMS

A. General

1. Set and build into the work anchorage devices and other embedded items required for other work that is attached to, or supported by, cast-in-place concrete. Use setting drawings, diagrams, instructions and directions provided by suppliers of the items to be attached thereto.

3.11 EDGE FORMS AND SCREED STRIPS FOR SLABS

A. Set edge forms or bulkheads and intermediate screed strips for slabs to obtain required elevations and contours in the finished slab surface. Provide and secure units to support types of screeds required.

3.12 METAL INSERTS

A. Install metal inserts for anchorage of materials or equipment to concrete construction, not supplied by other trades and as required for the work. Concrete inserts are described in Section 05500 of these Specifications.

B. Provide flashing reglets formed of sheet metal of the same type and gauge as the flashing metal to be built into the reglet, unless otherwise shown. Where resilient or elastomeric sheet flashing or bituminous membranes are terminated in reglets, provide reglets of not less than 20 gauge galvanized sheet steel. Size, shape and install reglets as detailed. Fill reglet or cover face opening to prevent intrusion of concrete or debris.

3.13 REMOVAL OF FORMS

A. General

Forms shall be removed and concrete temperature maintained in accordance with A.C.I. 301 (latest) Chapter 12.

B. Forms shall not be removed until the concrete has attained the strength to support its own weight and any construction live loads. Under no circumstances shall forms be stripped before concrete is aged 48 hours (walls, columns, and beam faces) and 7 days (slab and beam soffits).

3.14 RE-USE OF FORMS

A. Clean and repair surfaces of forms to be re-used in the work. Split, frayed, delaminated or otherwise damaged form facing material will not be acceptable. Apply new forms coating compound material to concrete contact surfaces as specified for new formwork.

B. When forms are extended for successive concrete placement, thoroughly clean surfaces, remove fins and laitance, and tighten forms to close all joints. Align and secure joints to avoid offsets. Do not use "patched" forms for exposed concrete surfaces except as acceptable to the Engineer.

SECTION 03200 – CONCRETE REINFORCEMENT

PART I – GENERAL

1.01 SCOPE OF WORK

A. The Contractor shall furnish all labor, tools, materials, equipment and incidentals required to provide the required reinforcement as shown on the Plans and specified herein.

1.02 RELATED WORK

A. Refer to Section 03100 – Concrete Formwork
B. Refer to Section 03300 – Cast-in-Place Concrete
C. Refer to Section 03310 – Concrete – General

1.03 DESCRIPTION OF WORK

A. The extent of concrete reinforcement is shown on the Drawings and in schedules.

B. The work includes fabrication and placement of reinforcement for cast-in-place concrete, including bars, welded wire fabric, ties and supports.

1.04 QUALITY ASSURANCE

A. The installer must examine the substrate and the conditions under which concrete reinforcement is to be performed, and notify the Contractor in writing of unsatisfactory conditions. Do no proceed with the work until unsatisfactory conditions have been corrected in a manner acceptable to the installer.

B. Codes and Standards

1. Comply with requirements of the following codes and standards, except as herein modified:

a. American Concrete Institute, ACI 315-"Manual of Standard Practice for Detailing Reinforced Concrete Structures".

b. American Concrete Institute, ACI 318-"Building Code Requirements for Reinforced Concrete".

c. Concrete Reinforcing Steel Institute – "Manual of Standard Practice".

1.05 SUBMITTALS

A. Manufacturer's Data – Concrete Reinforcement

1. For information only, submit two (2) copies of manufacturer's specifications and installation instructions for all proprietary materials and reinforcement accessories. Submit two (2) certified copies of mill reports covering the chemical and physical properties of each type of steel used.

B. Shop Drawings – Concrete Reinforcement

1. The Contractor shall make complete sets of shop drawings as specified in the General Contract Conditions. Comply with ACI 315 "Manual of Standard Practice for Detailing Reinforced Concrete Structures" (for concrete beam rebar cover refer to drawings), show bar schedules, stirrup spacing, diagrams of bent bars, arrangements and assemblies, as required for the fabrication and placement of concrete reinforcement. Include special reinforcement required at openings through concrete structures.

2. Complete detailed shop drawings and schedules shall be submitted by the Contractor for review by the Engineer as specified in GCC-18.

1.06 PRODUCT DELIVERY, HANDLING AND STORAGE

A. Deliver reinforcement to the project site bundled, tagged and marked. Use metal tags indicating bar size, lengths, and other information corresponding to markings shown on placement diagrams.

B. Store concrete reinforcement materials at the site to prevent damage and accumulation of dirt or excessive rust.

PART II – PRODUCTS

2.01 MATERIALS

A. Reinforcing Bars: ASTM A615, and as follows:

1. Provide Grade 60 for Bar Nos. 3 to 18, except as otherwise indicated.

B. Steel Wire: ASTM A82

C. Welded Wire Fabric: ASTM A185

D. Supports for Reinforcement

1. Bolsters, chairs, spacers and other devices for spacing, supporting and fastening reinforcement in place, use wire bar type supports complying with PS7-66, unless otherwise indicated. Do not use wood, brick and other unacceptable materials.

2. For slabs on grade, use supports with sand plates or horizontal runners where wetted base materials will not support chair legs.

3. For exposed-to-view concrete surfaces, where legs of supports are in contact with forms, provide Class "D" stainless steel protected bar supports.

2.02 FABRICATION

A. General

1. Shop fabricate reinforcing bars to conform to required shapes and dimensions, with fabrication tolerances complying with ACEI 315. In case of fabricating errors, do not re-bend or straighten reinforcement in a manner that will injure or weaken the material. Field bending is not acceptable.

B. Unacceptable Materials

1. Reinforcement with any of the following defects will not be permitted in the work:

a. Bar lengths, depths, and bends exceeding specified fabrication tolerances.

b. Bends or kinks not indicated on Drawings or final shop drawings.

c. Bars with reduced cross-section due to excessive rusting or other cause.

PART III – EXECUTION

3.01 INSTALLATION

A. Comply with the specified codes and standards, and Concrete Reinforcing Steel Institute recommended practice for "Placing Reinforcing Bars", for details and methods of reinforcement placement and supports, and as herein specified.

B. Clean reinforcement to remove loose rust and mill scale, earth, ice and other materials which reduce or destroy bond with concrete.

C. Position, support and secure reinforcement against displacement by formwork, construction, or concrete placement operations. Locate and support reinforcing by metal chairs, runners, bolsters, spacers and hangers, as required. Steel reinforcing may not be heat bent.

D. Place reinforcement to obtain minimum coverages for concrete protection. Arrange space and securely tie bards and bar supports together with 16 gauge wire to hold reinforcement accurately in position during concrete placement operations. Set wire ties so that ends are directed away from exposed concrete surfaces.

E. Install welded wire fabric in as long lengths as practicable. Lap adjoining pieces at least one full mesh and lace splices with 16 gauge wire. Do not make end laps midway between supporting beams, or directly over beams of continuous structures. Offset end laps in adjacent widths to prevent continuous laps. All welded wire fabric shall be supported.

F. Provide sufficient numbers of supports and of strength to carry reinforcement. Do not place reinforcing bars more than 2" beyond the last leg of any continuous bar support. Do not use supports as bases for runways for concrete conveying equipment and similar construction loads.

3.02 SPLICES

Provide standard reinforcement splices unless indicated otherwise on the Drawings by lapping ends, placing bars in contact, and tightly wire tying. Comply with requirements of AC1 318 for minimum lap of spliced bars. No welded splices and/or ties will be accepted.

SECTION 03300 – CAST-IN-PLACE CONCRETE

PART I – GENERAL

1.01 SCOPE OF WORK

A. The extent of cast-in-place concrete work is shown on the Drawings.

B. The work includes providing cast-in-place concrete consisting of Portland cement, fine and coarse aggregate, water, and selected admixtures; combined, mixed, transported, placed, finished and cured as herein specified.

1.02 RELATED WORK

A. Concrete Form Work – Section 03100
B. Concrete Reinforcement – Section 03200
C. Concrete, General – Section 03310

1.03 QUALITY ASSURANCE

A. Codes and Standards

1. Comply with the provisions of the following codes and standards, except as otherwise shown or specified:

a. ACI 301 – "Specifications for Structural Concrete for Buildings"
b. ACI 304 – "Recommended Practice for Measuring, Mixing, Transporting and Placing Concrete"
c. ACI 305 – "Recommended Practice for Hot Weather Concreting"
d. ACI 306 – "Recommended Practice for Cold Weather Concreting"
e. ASTM C-94 – "Ready-Mixed Concrete"

2. The continuity of color and texture for exposed concrete surfaces is of prime importance. Maintain such controls and procedures, in addition to those specified, as necessary to provide continuous match of concrete work.

1.04 SUBMITTALS

A. Coordinate the work of this section with requirements for submittals specified in Section 03310.

B. Delivery Tickets: Furnish copies of delivery tickets for each load of concrete delivered to site. Provide items of information as specified.

PART II – PRODUCTS

2.01 MATERIALS

A. Concrete

1. For concrete materials, see Section 03310.

B. Joint Materials

1. Waterstops

a. Flat dumbbell type waterstops at construction joints and other joints where no movement is expected, unless otherwise shown; web thickness not less than 3/8" for widths 9" and over.

b. At expansion joints provide 9" x 3/8" dumbbell type with ¾" diameter minimum center bulb.

c. Provide either rubber or PVC waterstops at Contractor's option, with rubber units complying with Corps of Engineers CRD-C513 and PVC units complying with CRD-C572.

d. Manufacturers offering products to comply with requirements include the following: Electrovert, Inc.: W. R. Meadows, Inc.; Weather guard Prod. Corp.; Gates Rubber Co.; and Servicised Products/W.R. Grace, or equal.

2. Expansion Joints

a. Preformed cork expansion joint filler material where required shall conform with ASTM Spec. D1752, Type 2, or Fed. Spec. HH-F-341, Type 2, Class B.

b. Products offered by manufacturers to comply with the requirements include the following: Sonoflex Cork by Sonneborn-Contech, Inc.; Tex-Cork by J&P Petroleum Products, Inc., or equal.

c. A resilient, closed-cell, cross-linked ethylene vinyl acetate material may also be used.

d. Products offered by manufacturers to comply with the requirements include the following: Evazote 50 by E-poxy Industries, Inc., similar by Tremco, W.R. Grace & Co., or equal.

C. Bonding Materials

1. Epoxy-Resin Bonding Agent

a. 2-component, mineral-filled, epoxy-polysulphide polymer complying with FS MMM-G-650, Type I or Type II, Grade A.

b. Products offered by manufacturers to comply with the requirements for epoxy-resin type grout include the following: Sikadur Hi-Mod – Sika Chemical Corp.; Epoxtite Grout – W.R. Grace; Polytops – Chem-Masters Corp.; Sonobond – Sonneborn-Contech.; Probond ET-50 – Protec Industries, or equal.

D. Curing

1. Concrete shall be protected against loss of moisture, rapid drying or temperature changes, mechanical injury, or injury from rain or flowing water. Forms shall be removed and concrete temperature maintained in accordance with ACI 301 (latest) Chapter 12.

2. Curing shall commence as soon as free water has disappeared from the surfaces after finishing. Curing of formed soffits of beams, girders, floor slabs, and similar surfaces shall be accomplished by moist curing with forms in place for full curing period.

3. Except where specific methods of curing are specified, curing may be accomplished by any one of the following methods:

a. Moist Curing: Surfaces shall be kept continuously wet by covering with burlap, mats or sand, thoroughly saturated with water and covering kept wet by spraying or hosing. Place materials to provide complete surface coverage and lap all joints minimum 3 inches.

b. Impervious-Sheeting Curing: Surfaces shall be thoroughly wetted with a fine spray of water and then covered with waterproof paper, polyethylene sheeting or polyethylene-coated waterproof paper. Edges and ends of sheeting shall be overlapped not less than 4 inches and securely cemented or taped to form a continuous cover. Sheeting shall be weighted down to prevent displacement and shall be repaired or replaced if torn, damaged or removed during curing period.

4. Moisture-retaining cover: One of the following:

a. Waterproof paper, complying with ASTM C 171, Type 1 or Type 2
b. Polyethylene Sheeting, complying with AASHO M171
c. Polyethylene-coated burlap

2.02 CONCRETE MIXING

A. General

1. Concrete shall be transit-mixed as specified herein. Batch plants must comply with the requirements of ACI 304, with sufficient capacity to produce concrete of the qualities specified in quantities required to meet the construction schedule. All plant facilities are subject to testing laboratory inspection and acceptance of the Engineer.

B. Ready-Mix Concrete

1. Comply with the requirements of ASTM C-94, and as herein specified, provided the quantity and rate of delivery will permit unrestricted progress of the work in accordance with the placement schedule. During hot weather, or under conditions contributing to rapid setting of concrete, a shorter mixing time than specified in ASTM C-94 may be required, as specified below. Proposed changes in mixing procedures, other than herein specified, must be accepted by the Engineer before implementation.

C. Modifications to ASTM C-94 are as follows:

1. Quality of Concrete

a. Provide concrete materials, proportions and properties as herein specified, in lieu of ASTM Section 4.

2. Tolerances in Slump

a. Provide concrete at slump herein specified. Such limit shall be considered nominal slumps and limited as dictated in Section 6, paragraph 6.1.1.

3. Certification

a. All deliveries shall be accompanied by a ticket or tapes printed in accordance with New York State Department of Transportation requirements verifying quantities.

4. Maintain Equipment

a. Equipment should be maintained in proper operating condition, with drums cleaned before charging each batch. Schedule rates of delivery in order to prevent delay of placing the concrete after mixing, or holding dry-mixed materials too long in the mixer before the addition of water and admixtures.

PART III – EXECUTION

3.01 CONCRETE PLACEMENT

A. General

1. Place concrete in compliance with the practices and recommendation of ACI-304, and as herein specified.

2. Deposit concrete continuously or in layers of such thickness that no concrete will be placed on concrete which has hardened sufficiently to cause the formation of seams or planes of weakness within the section. If a section cannot be placed continuously, provided construction joints as herein specified. Perform concrete placing at such a rate that concrete which is being integrated with fresh concrete is still plastic. Deposit concrete as nearly as practicable to its final location to avoid segregation due to rehandling or flowing. Do no subject concrete to any procedure which will cause segregation.

3. Screen concrete which is to receive other construction to the proper level to avoid excessive skimming or grouting.

4. Do not use concrete which becomes non-plastic and unworkable, or does not meet the required quality control limits, or which has been contaminated by foreign materials. Do not use retempered concrete. Remove rejected concrete from the project site and dispose of in an acceptable location.

B. Pre-Placement Inspection

1. Before placing concrete, inspect and complete the formwork installation, reinforcing steel, and items to be embedded or cast-in. Notify other crafts involved in ample time to permit the installation of their work; cooperate with other trades insetting such work, as required. Thoroughly wet wood forms immediately before placing concrete, as required where form coatings are not used.

2. Soil at bottom of foundation systems is subject to testing for soil bearing value by a testing laboratory, as directed by the Engineer, at the Contractor's expense. Place concrete immediately after approval of foundation excavations. Dewater all areas as required before placing concrete.

C. Concrete Conveying

1. Handle concrete from the point of delivery and transfer to the concrete conveying equipment and to the locations of final deposit as rapidly as practicable by methods which will prevent segregation and loss of concrete mix materials.

2. Provide mechanical equipment for conveying concrete to ensure a continuous flow of concrete at the delivery end. Provide runways for wheeled concrete conveying equipment from the concrete delivery point to the locations of final deposit. Keep interior surfaces of conveying equipment, including chutes, free of hardened concrete, debris, water, snow, ice and other deleterious materials. No changes in mix design or slump will be permitted for pumping without approval by the Engineer.

D. Placing Concrete into Forms

1. Deposit concrete in forms in horizontal layers not deeper than 18" and in a manner to avoid inclined construction joints.

2. Remove temporary spreaders in forms when concrete placing has reached the elevation of such spreaders.

3. Consolidate concrete placed in forms by mechanical vibrating equipment supplemented by hand-spading, rodding or tamping. Use vibrators designed to operate with vibratory element submerged in concrete, maintaining a speed of not less than 6000 impulses per minute when submerged in the concrete. Vibration of forms and reinforcing will not be permitted, unless otherwise accepted by the Engineer.

E. Do Not Use Vibrators To Transport Concrete Inside Of Forms

1. Insert and withdraw vibrators vertically at uniformly spaced locations not farther than the visible effectiveness of the machine. Do not insert vibrators into lower layers of concrete that have begun to set. At each insertion, limit the duration of the vibration to the time necessary to consolidate the concrete and complete embedment of reinforcement and other embedded items without causing segregation of the mix.

2. Do not place concrete in supporting elements until the concrete previously placed in columns and walls is no longer plastic.

F. Placing Concrete Slabs

1. Deposit and consolidate concrete slabs in a continuous operation, within the limits of construction joints, until the placing of a panel or section is completed.

G. Consolidate concrete during placing operations using mechanical vibrating equipment, so that concrete is thoroughly worked around reinforcement and other embedded items and into corners.

1. Consolidate concrete placed in beams and girders or supported slabs, and against bulkheads of slabs on ground, as specified for formed concrete structures. Consolidate concrete in the remainder of slabs by vibrating bridge screed, roller pipe screed, or other acceptable methods. Limit the time of vibrating consolidation to prevent bringing an excess of fine aggregate to the surface.

2. Bring slab surfaces to the correct level with a straight edge and strike off. Use bull floats or derbies to smooth the surface, leaving it free of humps or hollows. Do not sprinkle water on the plastic surface. Do not disturb the slab surfaces prior to beginning finishing operations.

H. Maintain reinforcing steel in the proper position continuously during concrete placement operations

3.02 BONDING

A. Roughen surfaces of set concrete at all joints, except where bonding is obtained by use of a concrete bonding agent, and clean surfaces of laitance, coatings, loose particles, and foreign matter. Roughen surfaces in a manner to expose bonded aggregate uniformly and to not leave laitance, loose particles of aggregate, or damaged concrete at he surface.

B. Prepare for bonding of fresh concrete to new concrete that has set but is not fully cured, as follows:

1. At joints between footings and walls or columns, and between walls or columns and beams or slabs they support, and elsewhere unless otherwise specified herein, dampen, but do not saturate, the roughened and cleaned surface of set concrete immediately before placing fresh concrete.

2. At joints in exposed work: at vertical joints in walls; at joints in girders, beams, supported slabs and other structural members; and at joints designed to contain liquids; dampen, but do not saturate,

the roughened and cleaned surface of set concrete and apply a liberal coating of neat cement grout.

3. Use neat cement grout consisting of equal parts Portland cement and fine aggregate by weight and not more than 6 gallons of water per sack of cement. Apply with a stiff broom or brush to a minimum thickness of 1/16". Deposit fresh concrete before cement grout has attained its initial set.

4. In lieu of neat cement grout, bonding grout may be a commercial bonding agent. Apply to cleaned concrete surfaces in accordance with the printed instruction of the bonding material manufacturer.

C. Prepare for bonding of fresh concrete to fully-cured hardened concrete or existing concrete by using an epoxy-resin adhesive binder, as follows:

1. Handle and store epoxy-resin adhesive binder in compliance with the manufacturer's printed instructions, including safety precautions.

2. Mix the epoxy-resin adhesive binder in the proportions recommended by the manufacturer, carefully following directions for safety of personnel.

3. Before depositing fresh concrete, thoroughly roughen and clean hardened concrete surfaces and coat with epoxy-resin grout not less than 1/16" thick. Place fresh concrete while the epoxy-resin material is still tacky, without removing the in-place grout coat, and as directed by the epoxy-resin manufacturer.

3.03 COLD WEATHER PLACING

A. Protect all concrete work from physical damage or reduced strength which could be caused by frost, freezing actions, or low temperatures, in compliance with the requirements of ACI 306 and ACI 301 and as herein specified.

B. In addition, when air temperature has fallen to or is expected to fall below 40 degrees F., uniformly heat all water and aggregates before mixing as required to obtain a concrete mixture temperature of not less than 50 degrees F. and not more than 80 degrees F. at point of placement.

C. Do not use frozen materials or materials containing ice or snow. Do not place concrete on frozen subgrade or on subgrade containing frozen materials. Ascertain that forms, reinforcing steel, and adjacent concrete surfaces are entirely free of frost, snow and ice before placing concrete.

D. Do not use calcium chloride, salt, and other materials containing antifreeze agents or chemical accelerators, unless otherwise accepted in writing by the Engineer.

3.04 HOT WEATHER PLACING

A. When hot weather conditions exist that would seriously impair the quality and strength of concrete, place concrete in compliance with ACI 305 and ACI 301 and as herein specified.

B. Cool ingredients before mixing to maintain concrete temperature at time of placement below 85 degrees F. Mixing water may be chilled, or chopped ice may be used to control the concrete temperature provided the water equivalent of the ice is calculated to the total amount of mixing water.

C. Cover reinforcing steel with water-soaked burlap if it becomes too hot, so that the steel temperature will not exceed the ambient air temperature immediately before embedment in concrete.

D. Wet forms thoroughly before placing concrete.

E. Do not use retarding admixtures. Retarding admixtures may be used with approval provided they are by the same manufacturer as the water reducer specified herein, and will have the same effect on water reduction, air entrainment and workability.

3.05 UNDERWATER PLACING

A. Concrete placement in water will only be permitted if conditions render it impossible or inadvisable to dewater excavations before placing concrete, and only when acceptable to the Engineer.

B. Revise the concrete mix design to suit underwater placement requirements, and submit to the Engineer for acceptance before commencing underwater placement operations. Deposit concrete by the tremie method, or other suitable means, in continuous placement to prevent formation of layers.

3.06 JOINTS

A. Construction Joints

1. Locate and install construction joints, which are not shown on the Drawings, so as not to impair strength and appearance of the structure, as acceptable to the Engineer. Locate construction joints on shop drawings, if required but not shown, as follows:

a. In walls, at not more than 30 feet on center in any horizontal direction; at tope of footings; at top of slabs on ground; at top and bottom of door and window openings or as required to conform to architectural details as directed by the Engineer; and at the underside of the deepest beam or girder framing into wall.

b. In columns or piers, at the top of footing; at the top of slabs on ground; and at the underside of the deepest beam or girder framing into the column or pier.

c. In slabs, so as to divide the slab into areas not in excess of 625 square feet maximum, or 25 feet, unless otherwise accepted by the Engineer. Conform to slab placement diagrams or pattern layout for placement where shown.

2. Provide keyways at least 1 ½" deep in all construction joints in wall, slabs, and between walls and footings; accepted bulkheads designed for this purpose may be used for slabs.

a. Place construction joints perpendicular to the main reinforcement. Continue all reinforcement across construction joints.

B. EXPANSION JOINTS

1. Expansion joints shall be located a minimum of 90 feet on center or as shown on the Plans, and/or as directed by the Engineer.

2. All expansion joints shall be provided with flexible waterstops.

3. Reinforcement or other imbedded metal items bonded to the concrete (except dowels in floors bonded on only one side of joints) shall not extend continuously through any expansion joint.

C. Waterstops

1. Provide waterstops in construction joints as shown on the Drawings. Install waterstops to form a continuous diaphragm in each joint. Make provisions to support and protect waterstops during the progress of the work. Fabricate field joints in waterstops in accordance with manufacturers printed instructions. Protect waterstop material from damage where it protrudes from any joint.

2. The Drawings may not indicate waterstops in expansion joints; however, all expansion joint shall be provided with waterstops.

D. Isolation Joints in Slabs on Ground

1. Provide isolation joints in slabs on ground at all points of contact between slabs on ground and vertical surfaces, such as column pedestals, foundation walls, grade beams and elsewhere as indicated.

3.07 FINISH OR FORMED SURFACES

A. Standard Rough Form Finish

1. Provide standard rough form finish to all concrete formed surfaces that are to be concealed in the finish work or by other construction, unless otherwise shown or specified.

2. Standard rough form finish shall be the concrete surface having the texture imparted by the form facing material used, with defective areas repaired and patched as specified, and all fins and other projections exceeding ¼" in height rubbed down with wood blocks.

B. Standard Smooth Finish

1. Provide standard smooth finish for all concrete formed surfaces that are to be exposed to view, or that area to be covered with a coating material applied directly to the concrete or a covering material bonded to the concrete such as waterproofing, dampproofing, painting, or other similar system.

2. Standard smooth finish shall be the as-cast concrete surface as obtained with eh form facing material, with defective areas repaired and patched as specified, and all fins and other projections on the surface completely removed and smoothed.

C. Grout Finish

1. Provide grout finish to all interior and exterior concrete vertical surfaces which are exposed to view in the finish structure, consisting of one part Portland cement to 1 ½ parts of fine aggregate passing a No. 30 mesh by volume, mixed with only enough water to produce a consistency of thick paint.

2. Blend the Portland cement portion of standard Portland cement and white Portland cement, proportioned as determined by trial mixes, so that the final color of grout, when dry, will be approximately the same color as the adjacent concrete.

3. Thoroughly wet the concrete surface and apply grout immediately to the wetted surfaces. Spread grout with clean burlap pads or sponge rubber floats to fill all pits, air bubbles and surface holes. Remove excess grout by scraping, followed by rubbing with clean

burlap to remove any visible grout film. Keep grout damp during the setting period by means of fog spray in hot, dry weather. Complete any area in the same day it is started, with the limits of any area being the natural breaks in the finished surface.

D. Related Unformed Surfaces

1. At tops of walls, horizontal offsets, and similar unformed surfaces occurring adjacent to formed surfaces, strike off smooth and finish with a texture matching the adjacent formed surfaces. Continue the final surface treatment of formed surfaces uniformly across the adjacent unformed surfaces, unless otherwise shown.

E. Exterior Platforms and Steps

Concrete surfaces shall be finished with a float and troweled by skilled workmen. After the surfaces have been leveled and finished and before the concrete takes its final set, the surfaces shall be evenly stroked with a broom to give a slightly rough and uniform finish. Steps, unless otherwise shown on the Plans, shall be fitted with non-slip tread nosings. Nosings are described in section 05500 of these Specifications.

3.08 MONOLITHIC SLAB FINSHES

A. Scratch Finish

1. Apply scratch finish to monolithic slab surfaces that are to receive concrete floor topping or mortar setting beds for tile, Portland cement terrazzo, and other bonded applied cementitious finish flooring material, and as shown on the Drawings.

2. After placing slabs, plane the surface to a tolerance not exceeding ¼" to 2' when tested with a 2' straightedge. Slope surfaces uniformly to drains where required. After leveling, roughen the surface before the final set with stiff brushes, brooms or rakes.

B. Float Finish

1. Apply float finish to monolithic slab surfaces that are to receive trowel finish and other finishes as hereinafter specified, and slab surfaces which are to be covered with membrane or elastic waterproofing, membrane or elastic roofing, or sand bed terrazzo, and as shown on the Drawings or in schedules.

2. After placing concrete slabs, do not work the surface further until ready for floating. Begin floating when the surface water has disappeared or when the concrete has stiffened sufficiently to permit the operation of a power-driven float, or both. Consolidate the surface with power-driven floats, or by hand-floating if area is small or inaccessible to power units. Check and level the surface plane to a tolerance not exceeding ¼" in 10' when tested with

a 10' straightedge placed on the surface at not less than two different angles. Cut down high spots and fill all low spots. Uniformly slope surfaces to drains. Immediately after leveling, refloat the surface to a uniform, smooth, granular texture.

C. Trowel Finish

1. Apply trowel finish to monolithic slab surfaces that are to be exposed to view, unless otherwise shown, and slab surfaces that are to be covered with resilient flooring, paint, or other thin-film finish coating system.

2. After floating, begin the first trowel finish operation using a power-driven trowel. Begin final troweling when the surface produces a ringing sound as the trowel is moved over the surface.

3. Consolidate the concrete surface by the final hand troweling operation, free of trowel marks, uniform in texture and appearance, and with a surface plane tolerance not exceeding 1/8" in 10' when tested with a 10' straightedge. Grind smooth surface defects which would telegraph through applied floor covering system.

3.09 CONCRETE CURING AND PROTECTION

A. General

1. Protect freshly placed concrete from premature drying and excessive cold or hot temperature, and maintain without drying at a relatively constant temperature for a period of time necessary for hydration of the cement and proper hardening of the concrete.

2. Start initial curing as soon as free water has disappeared from the concrete surface after placing and finishing. Weather permitting, keep continuously moist for not less than 72 hours.

3. Begin final curing procedures immediately following initial curing and before the concrete has dried. Continue final curing for at least 168 cumulative hours (not necessarily consecutive) during which the concrete has been exposed to air temperatures above 50 degrees F. Avoid rapid drying at the end of the final curing period.

B. Curing Method

1. Perform curing of concrete by moist curing or moisture-retaining cover curing, as herein specified.

2. For curing, use only water that is free to impurities which could etch or discolor exposed, natural concrete surfaces.

3. Provide moisture curing by any of the following methods:

a. Keeping the surface of the concrete continuously wet by covering with water.
b. Continuous water-fog spray.
c. Covering the concrete surface with the specified absorptive cover continuously wet. Place absorptive cover so as to provide coverage of the concrete surfaces and edges with a 4" lap over adjacent absorptive covers.

C. Moisture-Cover Curing

1. Cover the concrete surfaces with the specified moisture-retaining cover for curing concrete, placed in the widest practicable width with sides and ends lapped at least 3" and sealed by waterproof tape or adhesive. Immediately repair any holes or tears during the curing period using cover material and waterproof tape.

D. Curing Formed Surfaces

1. Cure formed concrete surfaces, including the under-sides of girders, beams, supported slabs and other similar surfaces by moist curing with the forms in place for the full curing period or until forms are removed. If forms are removed, continue curing by methods specified above, as applicable.

E. Curing Unformed Surfaces

1. Initially cure unformed surfaces, such as slabs, floor topping and other flat surfaces by moist curing, whenever possible.

2. Final cure unformed surfaces, unless otherwise specified, by any of the methods specified above, as applicable.

3. Final cure concrete surfaces to receive liquid floor hardener or finish flooring by use of moisture-retaining cover, unless otherwise acceptable to the Engineer.

F. Temperature of Concrete During Curing

1. When the atmospheric temperature is 90 degrees F. and below, maintain the concrete temperature at not less than 55 degrees F. continuously throughout the curing period. When necessary, make arrangements before concrete placing for heating, covering, insulation or housing as required to maintain the specified temperature and moisture conditions continuously for the concrete curing period. Provide cold weather protections complying with the requirements of ACI 306 and ACI 301.

2. When the atmospheric temperature is 80 degrees F. and above, or during other climatic conditions which will cause too rapid drying of the concrete, make arrangements before the start of concrete placing for the installation of wind breaks or shading, and for fog spraying, wet sprinkling, or moisture-retaining covering. Protect the concrete continuously for the concrete curing period. Provide hot weather protections complying with the requirements of ACI 305 and ACI 301.

G. Maintain concrete temperature as uniformly as possible, and protect from rapid atmospheric temperature changes. Avoid temperature changes in concrete which exceed 5 degrees F in any one hour and 50 degrees F in any 24-hour period.

H. Protection from Mechanical Injury

1. During the curing period, protect concrete from damaging mechanical disturbances including load stresses, heavy shock, excessive vibration, and from damage caused by rain or flowing water. Protect all finished concrete surfaces from damage by subsequent construction operations.

3.10 MISCELLANEOUS CONCRETE ITEMS

A. Filling-In

1. Fill in holes and openings left in concrete structures for the passage or work by other trades, unless otherwise shown or directed, after the work of other trades is in place. Mix, place and cure concrete as herein specified, to blend with in-place construction. Provide all other miscellaneous concrete filling shown or required to complete the work.

B. Curbs

1. Provide monolithic finish to interior curbs by tripping forms while concrete is still green and steel-troweling surfaces to a hard, dense finish with corners, intersections and terminations slightly rounded.

C. Equipment Bases and Foundations

1. Provide machine and equipment bases and foundations. Set anchor bolts for machines and equipment to template at correct elevations, complying with certified diagrams or templates of the manufacturer furnishing the machines and equipment.

D. Repair of Formed Surfaces

1. Repair exposed to view formed concrete surfaces, where possible, that contain defects which adversely affect the appearance of the finish. Remove and replace the concrete having defective surfaces if the defects cannot be repaired to the satisfaction of the Engineer. Surface defects, as such, include color and texture irregularities, cracks, spals, air bubbles, honeycomb, rock pockets, and holes left by the rods and bolts; fins and other projections on the surface; and stains and other discoloration that cannot be removed by cleaning.

2. Repair concealed formed concrete surfaces, where possible, that contain defects that adversely affect he durability of the concrete. If defects cannot be repaired, remove and replace the concrete having defective surfaces. Surface defects, as such, include cracks in excess of 0.01" wide, cracks of any width and other surface deficiencies which penetrate to the reinforcement or completely through non-reinforced sections, honeycomb, rock pockets, holes left by tie roads and bolts, and spalls except minor breakage at the corner.

3. Structures designed and intended to hold water or liquids shall be made watertight by the Contractor to conform with the following requirements. When the structures are filled with sewage or other liquids, any cracks or leaks shall be repaired. If the structure does not stop leaking to the satisfaction of the Engineer, the Contractor shall repair or replace, at this own expense, such parts of the work as may be necessary to secure the desired results.

E. Repair of Unformed Surfaces

1. Test unformed surfaces, such as monolithic slabs, for smoothness and to verify surface plane to the tolerances specified for each surface and finish. Correct low and high areas as herein specified.

2. Test unformed surfaces sloped to drain for trueness of slope, in addition to smoothness, using a template having the required slope. Correct high and low areas as herein specified.

3. Repair finished unformed surfaces that contain defects which adversely affect the durability of the concrete. Surface defects, as such, include crazing, cracks in excess of 0.01" wide or which penetrate to the reinforcement or completely through non-

reinforced sections regardless of width, spalling, popouts, honeycomb, rock pockets and other objectionable conditions.

4. Structures designed and intended to hold water or liquids shall be made watertight by the Contractor to conform with the following requirements. When the structures are filled with sewage or other liquids, any cracks or leaks shall be repaired. If the structure does not stop leaking to the satisfaction o the Engineer, the Contractor shall repair or replace, at his own expense, such part of the work as may be necessary to secure the desired results.

F. Correct high areas in unformed surfaces by grinding, after the concrete has cured at least 14 days.

G. Concrete low areas in unformed surfaces during, or immediately after completion of surface finishing operations by cutting out the low areas and replacing with fresh concrete. Finish repaired areas to blend into adjacent concrete. Proprietary patching compounds may be used when acceptable to the Engineer.

H. Repair defective areas, except random cracks and single holes not exceeding 1" diameter, by cutting out and replacing with fresh concrete. Remove defective areas to sound concrete with clean, square cuts, and expose reinforcing steel with at least ¾" clearance all around. Dampen all concrete surfaces in contact with patching concrete, and brush with a neat cement grout coating or concrete bonding agent. Placing patching concrete before grout takes its initial set. Mix patching concrete of the same materials to provide concrete of the same type or class as the original adjacent concrete. Place, compact and finish as required to blend with adjacent finished concrete. Cure in the same manner as adjacent concrete.

I. Repair isolated random cracks and single holes not over 1" in diameter by the dry-pack method. Groove the top of cracks, and cut out holes to sound concrete and clean of dust, dirt and loose particles. Dampen all cleaned concrete surfaces and brush with a neat cement grout coating. Place dry-pack before the cement grout takes its initial set. Mix dry-pack, consisting of one part Portland cement to 2 ½ parts fine aggregate passing a No. 16 mesh sieve, using only enough water as required for handling and placing. Compact dry-pack mixture in place and finish to match adjacent concrete. Keep patched areas continuously moist for not less than 72 hours.

Repair methods not specified above may be used, subject to the acceptance of the Engineer.

3.11 CONCRETE FILL–TANK, WET WELL, SUMP, CHANNEL - BOTTOMS

A. The surface of the structural slabs shall be struck off true to grades shown on the Drawings.

B. During placement of the slab, as soon as the condition of the concrete permits, before it has hardened appreciably (and normally within four hours after depositing) all water, inadvertent film, laitance, and loose aggregate shall be removed from the surface by means of wire or bristle brooms in such a manner a to leave the coarse aggregate slightly exposed and the surface clean and generally in condition to provide a good bond for the finish. The brooms shall "roll" the film and laitance (if any) from the slab and leave it clean. Avoid "muddying" the surface by brooming too soon. Raking shall not be employed, and large depressions and general unevenness shall be avoided. The surface thus prepared shall be covered with a layer of sisal-kraft paper or approved equal, to prevent its filling with debris from other construction operations before the floor finish is applied.

C. If, in the opinion of the Engineer, the surface preparation is not properly done and the resulting surfaces are unsatisfactory, the Contractor shall, at his own expense, chip the surfaces by hand or power tools to expose clean virgin concrete (mortar or aggregate) over every square inch of surface to receive mortar finish.

D. Concrete mortar finish shall be applied to the depth shown on the Drawings. Concrete mortar for this finish shall be in accordance with eh following schedule:

Material	Volumes	Weights
Cement	1.0	2.00
Embeco	0.2	0.33
Sand	1.0	1.00
Pea Gravel	1.5	1.50

The size of the coarse aggregate shall not exceed ¾ inch. The surface receiving the mortar finish shall be thoroughly cleaned of all debris, dirt, grease and other foreign matter by brooming with a clean broom and flushed with a strong jet of water. Before placing the finish, all pools of water left by the cleaning operation shall be removed by mopping or air jet and a thin (1/16 inch – 1/8 inch) coat of thick creamy net cement slurry shall be broomed into the surface a short distance ahead of the finish-placing operation. The finish shall be applied immediately, before the grout has dried or hardened.

E. Mortar shall be placed in the circular tank bottoms and screed to a true surface.

SECTION 03310 – CONCRETE – GENERAL

PART I – GENERAL

1.01 SCOPE OF WORK

A. The Contractor shall furnish all labor, tools, materials, equipment and incidentals required to provide concrete where specified for this project.

1.02 RELATED WORK

A. Refer to Section 03100 – Concrete Formwork
B. Refer to Section 03200 – Concrete Reinforcement
C. Refer to Section 03300 – Cast-in-Place Concrete

1.03 DESCRIPTION OF SYSTEM

A. This section establishes general criteria for materials, mixes and evaluations of concrete as required for other related sections of these Specifications.

1.04 QUALITY ASSURANCE

A. Codes and Standards

1. Comply with the provisions of the following codes, specifications and standards, except as otherwise shown or specified.

a. ACI 301 – "Specifications for Structural Concrete for Buildings"
b. ACI 304 – "Recommended Practice for Measuring, Mixing, Transporting and Placing Concrete"
c. ACI 305 – "Recommended Practice for Hot Weather Concreting"
d. ACI 306 – "Recommended Practice for Cold Weather Concreting"
e. ACI 308 – "Recommended Practice for Curing Concrete"
f. ACI 311 – "Recommended Practice for Concrete Inspection"
g. ACI 318 – "Building Code Requirements for Reinforced Concrete"

2. Where provisions of the above codes and standards are in conflict with the Uniform Building Code and New York State in force for this project, the building code shall govern.

B. Concrete Testing Service

1. The Contractor shall employ, at his own expense, a testing laboratory experienced in design and testing of concrete materials and mixes to perform material evaluation tests and to design concrete mixes.

2. Acceptable testing laboratories are:

a. SJB Services, Inc.
1951-1 Hamburg Turnpike
Lackawanna, New York 14218

b. Buffalo Testing Laboratories
902 Kenmore Avenue
Buffalo, New York 14216

3. The Contractor shall employ, at his own expense, a separate testing laboratory acceptable to the Engineer to perform other quality control testing and to submit test reports to the Engineer. The testing laboratory shall be responsible for conducting and interpreting the tests, and shall state in each report whether or not the test specimens comply to the specified requirements, and shall indicate any deviations therefrom.

C. Materials and installed work may require testing and retesting, as directed by the Engineer, at any time during the progress of the work. Allow free access to material stockpiles and facilities at all times. Tests, not specifically indicated to be done at the Owner's expense, including the retesting of rejected materials and installed work, shall be done at the Contractor's expense.

1.05 TESTS FOR CONCRETE MATERIALS

A. For normal weight concrete, test aggregates by the methods of sampling and testing of ASTM C 33.

B. For Portland cement, conform to ASTM C 150.

C. Submit written reports to the Engineer for each material sampled and tested, prior to the start of work. Provide the project identification name and number, date o report, name of contractor, name of concrete testing service, source of concrete aggregates, material manufacturer and brand name for manufactured materials, values specified in the referenced specification for each material, and test results, indicate whether or not material is acceptable for intended use.

1.06 QUALITY CONTROL TESTING DURING CONSTRUCTION

A. Concrete shall be sampled and tested for quality control during the placement of concrete, as follows:

1. Sampling fresh concrete: ASTM C 172, except modified for slump to comply with ASTM C 94.

2. Slump: ASTM C 143; one test for each concrete load at point of discharge; and one for each set of compressive strength test specimens.

3. Air content: ASTM C 231, pressure method; one for each set of compressive strength test specimens.

B. Compression Test Specimens

1. ASTM C31; one set of four (4) standard cylinders for each compressive strength test, unless otherwise directed. Mold and store cylinders for laboratory cured test specimens except when field-cured test specimens are required.

C. Concrete Temperature

1. Test hourly when air temperature is 40 degrees F. and below, and when 80 degrees F. and above; and each time a set of compression test specimens made.

D. Compressive Strength Tests

1. ASTM C 39; one set for each truck load of concrete or fraction thereof, of each concrete class placed in any one day; one specimen tested at 7 days, two specimens tested at 28 days, and one specimen retained in reserve for later testing if required.

2. When the total quantity of a given class of concrete is less than 10 cubic yards, the strength tests may be waived by the Engineer if, in his judgment, adequate evidence of satisfactory strength is provided.

3. When the strength of field-cured cylinders is less than 85% of companion laboratory-cured cylinders, evaluate current operations and provide corrective procedures for protecting and curing the in-place concrete.

E. Testing Reports

1. Report test results in writing to the Engineer and the Contractor on the same day that tests are made. Reports of compressive strength tests shall contain the project identification name and number, date of concrete placement, name of contractor, name of

concrete supplier and truck number, name of concrete testing service, concrete type and class, location of concrete batch in the structure, design compressive strength at 28 days, concrete mix proportions and materials; compressive breaking strength and type of break for both 7-day and 28-day tests, air content, actual slump and concrete temperature.

F. Core Tests

1. The testing service shall take core samples of in-place concrete when test results are such that there is reasonable doubt that he specified concrete strengths and other characteristics have not been attained in the structure, as directed by the Engineer. The testing service shall conduct tests to determine the strength and other characteristics of the in-place concrete by compression tests on cored cylinders complying with ASTM C 42, or by load testing specified in ACI 318, or others as directed. The Contractor shall pay for such tests conducted and any other additional testing as maybe required. Petrographic studies or cores shall be performed as directed by the Engineer. This work shall be paid for by the Contractor.

1.07 WORKMANSHIP

A. Concrete work which does not conform to the specified requirements, including strength, tolerances and finishes, shall be corrected as directed by the Engineer at the Contractor's expense, without extension of time therefore. The Contractor shall also be responsible for the cost of corrections to any other work affected by or resulting from corrections to the concrete work.

B. Structures designed and intended to resist water or liquid pressure shall be made watertight by the Contractor to conform with the following requirements. When the structures are loaded with sewage or other liquids, any cracks or leaks shall be repaired. If the structure does not stop leaking to the satisfaction of the Engineer, the Contractor shall repair or replace, at his own expense, such part of the work as may be necessary to secure the desired results.

1.08 SUBMITTALS

A. Manufacturer's Data, Concrete – General

1. For information only, submit two copies of manufacturer's specifications with application and installation instructions for proprietary materials and items, including admixtures, bonding agents, waterstops, joint systems, dry shake finish materials and non-shrink grout.

B. Samples, Concrete – General

1. Submit samples of materials as specified and as otherwise may be requested by the Engineer, including names, sources and descriptions as required.

C. Laboratory Test Reports, Concrete – General

1. Submit two copies of laboratory test reports for concrete materials and mix design tests. The Engineer's review will be for general information only. Production of concrete to comply with specified requirements is the Contractor's responsibility.

PART II – PRODUCTS

2.01 CONCRETE MATERIALS

A. Portland Cement: ASTM C 150, as follows:

1a. Provide Type I cement for use in general concrete construction where low heat of hydration is not required and where no sulfate action is anticipated.

1b. Provide Type II cement for use in general concrete construction subjected or adjacent to sewage, sludge, effluent, etc.

1c. Provide Type III cement for use when high early strength is required for replacement of public pavements and commercial driveways.

2. Use only one brand of cement for each required type throughout the project, unless otherwise accepted by the Engineer.

3. A pozzolan material shall NOT be used.

B. Aggregates, Normal Weight Concrete: ASTM C 33, and as herein specified.

1. Final Aggregate

a. Clean, sharp, natural sand free from loan, clay, lumps or other deleterious substances.

b. Dune sand, bank run sand and manufactured sand are not acceptable.

2. Coarse Aggregate: Clean, uncoated, processed aggregate containing no clay, mud, loan, or foreign matter, as follows:

a. Crushed limestone processed from natural rock or stone.

b. Maximum aggregate size – not larger than one-fifth of the narrowest dimension between sides of forms, one-third of the depth of slabs, nor three-fourths of the minimum clear spacing between individual reinforcing bars or bundles or bars.

c. These limitations may be waived if, in the judgment of the Engineer, workability and methods of consolidation are such that concrete can be placed without honeycomb or void.

3. Supply of Aggregates

a. Provide aggregates from one source of supply to ensure uniformity in color, size and shape.

b. Do not use aggregates containing soluble salts or other substances such as iron sulphides, pyrite, marcasite or ochre which can cause stains on exposed concrete surfaces.

C. Water

1. Clean, fresh, free from oil, acid, organic matter or other deleterious substances.

2.02 CONCRETE ADMIXTURES

A. Provide admixtures produced by acceptable manufacturers and use in compliance with the manufacturer's printed directions. Do not use admixtures which have not been incorporated and tested in the accepted mixes, unless otherwise authorized in writing by the Engineer.

B. Air-Entraining Admixture: ASTM C 260 shall be used in all concrete to attain the specified air entrainment.

1. Products offered by manufactures to comply with the requirements for air-entraining admixture include the following:

a. Darex AEA; Dewey and Almy Chemical Div. of W.R. Grace
b. Sika AER; Sika Chemical Corp.
c. MB-VR; Master Builder's Co.
d. Or equal

C. Water-Reducing Admixture: ASTM C 494 shall be used in all concrete. When approved by the Engineer, retarding or acceleration formulations of the same product may be used.

1. Products offered by manufacturers to comply with the requirements for water-reducing admixture include the following:

a. Plastiment by Sika Chemical Corp.
b. SRDA: Dewey and Almy Chemical Div. Of W.R. Grace
c. Pozzolith; Master Builder's Co.
d. Or equal

D. Calcium Chloride: Do not use calcium chloride in concrete, unless otherwise authorized in writing by the Engineer.

2.03 PROPORTIONING AND DESIGN OF MIXES

A. Prepare design mixes for each type of concrete. Use an independent testing facility acceptable to the Engineer for preparing and reporting proposed mix designs. The testing facility shall not be the same as used for field quality control testing.

B. Proportion mixes by laboratory trial batch method, using materials to be employed on the project for each class of concrete required, complying with ACI 211.1 for normal weight and report to the Engineer for the following data:

1. Complete identification of aggregate source of supply.
2. Tests of aggregates for compliance with specified requirements.
3. Scale weight of each aggregate.
4. Brand, type of cement.
5. Brand, type and amount of each admixture.
6. Amounts of water used in trial mixes.
7. Proportions of each material per cubic yard.
8. Gross weight and yield per cubic yard of trial mixtures.
9. Measured slump.
10. Measured air content.
11. Theoretical yield.
12. Mix temperature.
13. Water-cement ratio.

Compressive strength developed at 7 days and 28 days, from not less than 3 test cylinders cast for the 7 and 28 day test, and for each design mix.

C. Reports

1. Submit written reports to the Engineer of each proposed mix for each class of concrete at least 15 days prior to start of work. Do not begin concrete production until mixes have been reviewed by the Engineer.

D. Laboratory Trial Batches

1. When laboratory trial batches are used to select concrete proportions, prepare test specimens in accordance with ASTM C 192 and conduct strength tests in accordance with ASTM C 39, as specified in ACI 301.

2. Establish a curve showing relationship between water-cement ratio (or cement content) and compressive strength, with at least 3 points representing batches which produce strengths above and below that required. Use not less than 2 specimens tested at 28-days, or an earlier age when acceptable to the Engineer, to establish each point on the curve. Proportions shall be taken from the cure at a point 1200 psi above the design strength.

E. Adjustable to Concrete Mixes

1. Mix design (w/c ratio) adjustments may be requested by the Contractor when characteristics of materials, job conditions, weather, test results, or other circumstances warrant, at no additional cost to the Owner and as accepted by the Engineer. Laboratory test data for revised mix designs and strength results must be submitted to and accepted by the Engineer before using in the work.

2.04 ADMIXTURES

A. Use air-entraining admixtures in all concrete, unless otherwise shown or specified. Add air-entraining admixture at the manufacturer's prescribed rate to result in concrete at the point of placement having air content within the following limits:

1. Concrete structures and slabs exposed to freezing and thawing or subjected to hydraulic pressure (air content as determined in accordance with ASTM C 231 or C 173):

a. 5± 1 percent for coarse aggregate size No. 467
b. 6± 1 percent for coarse aggregate size No. 57 or 67

B. Use water-reducing admixtures in all concrete in strict compliance with the manufacturer's directions. Admixtures to increase cement dispersion, or provide increased workability for low-slump concrete, may be used at the Contractor's option subject to the Engineer's acceptance.

1. Use amounts of admixtures as recommended by the manufacturer for climatic conditions prevailing at the time of placing. Adjust quantities of admixtures as required to maintain quality control.

C. Slump Limits (as determined in accordance with ASTMC 143):

1. 1 inch maximum
2. 3 inch maximum for footings, caissons, substructure walls
3. 4 inch maximum for slabs, beams, reinforced walls, columns

2.05 CONCRETE STRENGTH

A. There shall be two classes of concrete, 4000 psi at 28 days with maximum water-cement ratio of 0.45 and 2000 psi at 28 days with maximum water-cement ratio of 0.75.

B. The 2000 psi concrete is intended principally for pipe cradle and encasement or for backfill of unauthorized excavation. All other concrete, including all thrust blocks, shall be 4000 psi.

C. Minimum cement content:

Coarse Aggregate No.	Lb. Per Cu. Yd.
467 (1 ½ inch maximum)	517
57 (1 inch maximum)	564
67 (3/4 inch maximum)	564

PART III – EXECUTION

3.01 CONCRETE EVALUATIONS

A. Evaluation of Quality Control Tests

1. The concrete quality control testing as specified in Part I will be evaluated by the following criteria:

a. Do not use concrete delivered to the final point of placement which has slump or total air content outside the specified values.

B. Compressive strength tests for laboratory-cured cylinders will be considered satisfactory if the average of each set of two consecutive compressive strength tests results equal or exceed the 28-day design compressive strength of the type or class of concrete; and, no individual strength test falls below the required compressive strength by more than 500 psi.

1. Strength tests of specimens cured under field conditions may be required by the Engineer to check the adequacy of curing and protecting of the concrete placed.

Mold these specimens at the same time and from the same samples as the laboratory cured specimens, as directed by the Engineer.

2. Provide improved means and procedures for protecting concrete when the 28-day compressive strength of field-cured cylinders is less than 85% of companion laboratory-cured cylinders.

3. When laboratory-cured cylinder strengths are appreciably higher than the minimum required compressive strength, field-cured cylinder strengths need not exceed the minimum required compressive strength by more than 500 psi even though the 85% criterion is not met.

4. If individual tests of laboratory-cured specimens produce strengths more than 500 psi below the required minimum compressive strength, or if tests of field-cured cylinders indicate deficiencies in protection and curing, provide additional measures to assure that the load-bearing capacity of the structure is not jeopardized. If the likelihood of low-strength concrete is confirmed and computations indicate the load-bearing capacity may have been significantly reduced, tests of cores drilled form the area in question may be required.

5. If the compressive strength tests fail to meet the minimum requirements specified, the concrete represented by such tests will be considered deficient in strength and subject to additional testing as herein specified.

C. Formed Concrete Dimensional Tolerances

1. Formed concrete having any dimension smaller or greater than required, and outside the specified tolerance limits, will be considered deficient in strength and subject to additional testing as herein specified.

2. Formed concrete having any dimension greater than required will be rejected if the appearance or function of the structure is adversely affected, or if the larger dimensions interfere with other construction. Repair, or remove and replace rejected concrete as required to meet the construction conditions. When permitted, accomplish the removal of excessive material in a manner to maintain the strength of the section without affecting function and appearance.

D. Strength of Concrete Structures

1. The strength of the concrete structure in-place will be considered potentially deficient if it fails to comply with any of the requirements which control the strength of structure, including the following conditions:

a. Failure to meet compressive strength test requirements.

b. Concrete which differs from the required dimensions or location in such a manner to reduce strength

c. Concrete subjected to damaging mechanical disturbances; particularly load stresses, heavy shock, and excessive vibration.

d. Poor workmanship and quality control likely to result in deficient strength.

E. Testing Concrete Structure for Strength

1. When there is evidence that the strength of the concrete structure in-place does not meeting specification requirements, the concrete testing service shall take cores drilled from hardened concrete for compressive strength determination, complying with ASTM C 42 and as follows:

a. Take at least three representative cores from each member or area of suspect strength, from locations directed by the Engineer.

b. Test cores in a saturated-surface-dry condition per ACI 318 if the concrete will be wet during the use of the completed structure.

c. Test cores in an air-dry condition per ACI 318 if the concrete will be dry at all times during use of the completed structure.

2. Strength of concrete for each series of cores will be considered satisfactory if their average compressive strength is at least 90% and no single core is less than 75% of the 28-day required compressive strength.

3. Report test results in writing to the Engineer on the same day that tests are made. Include in test reports that project identification name and number, date, name of Contractor, name of concrete testing service, location of test core in the structure, type or class of concrete represented by core sample, nominal maximum size aggregate, design compressive strength, compression breaking strength and type of break (corrected for length-diameter ratio), direction of applied load to core with respect to horizontal plane of the concrete as placed, and the moisture condition of the core at time of testing.

4. Fill core holes solid with non-shrink mortar, and finish to match adjacent concrete surfaces.

5. Conduct static load test and evaluations complying with ACI 318 if the results of the core tests are unsatisfactory, or if core tests are impracticable to obtain, as directed by the Engineer.

6. Correct all concrete work that is found structurally inadequate by core tests or by results of static load tests, as directed by the Engineer.

UNSHEETED TRENCH DETAIL
(JANUARY 2012)

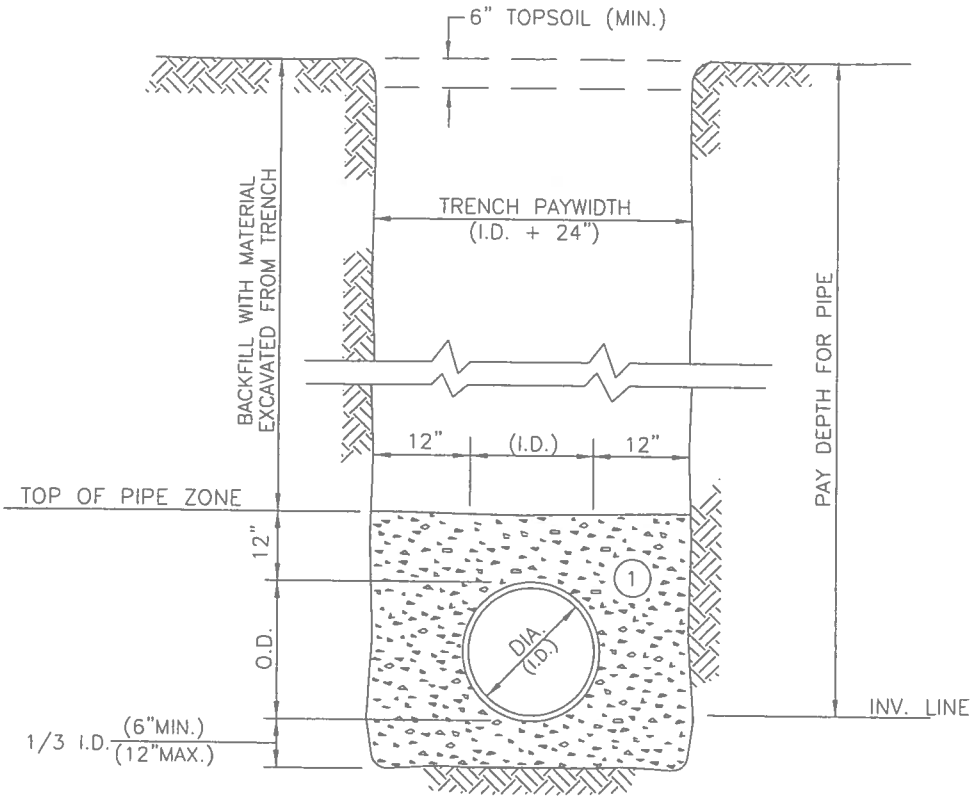

NOTES:

A. PIPE INSTALLATION SHALL BE IN ACCORDANCE WITH MANUFACTURERS RECOMMENDATIONS.

B. TRENCHING OPERATIONS SHALL INCLUDE ALL NECESSARY DEWATERING.

C. TRENCH DETAILS ARE ONLY SHOWN FOR PURPOSES OF MATERIAL PLACEMENT AND MAXIMUM PAY LIMITS.

D. AN OSHA APPROVED MOVABLE PROTECTIVE TRENCH SHIELD SHALL BE USED IN ALL UNSHEETED TRENCH AREAS.

MATERIALS

PIPE BEDDING MATERIAL (NYSDOT LATEST EDITION)

(1) NO.1 CRUSHED STONE WITH A GRADATION CONFORMING WITH NYSDOT SECTION 703-02. THE CRUSHED STONE SHALL BE WELL GRADED WITH NO PARTICLES LARGER THAN 1" AND HAVING A MAXIMUM GRADATION MEETING THE LIMITS DESCRIBED IN THE SPECIFICATIONS. THE BEDDING SHALL BE COMPACTED IN 6" LIFTS WITH EQUIPMENT ACCEPTABLE TO THE PIPE MANUFACTURER.

NOTE: SLAG SHALL NOT BE ALLOWED FOR MATERIALS (1)

ERIE COUNTY DEPT. OF ENVIRONMENT & PLANNING DIVISION OF SEWERAGE MANAGEMENT	Rev. 1 5/20/93	NOTE 2: PIPE INSTALLATION	STD.DETAIL
	Rev. 2 2/7/94	ADDED NOTE C & D	1
	File: d-01	Date: 3/1/91	

TRENCHING "UNDERCUT" DETAIL

(JANUARY 2012)

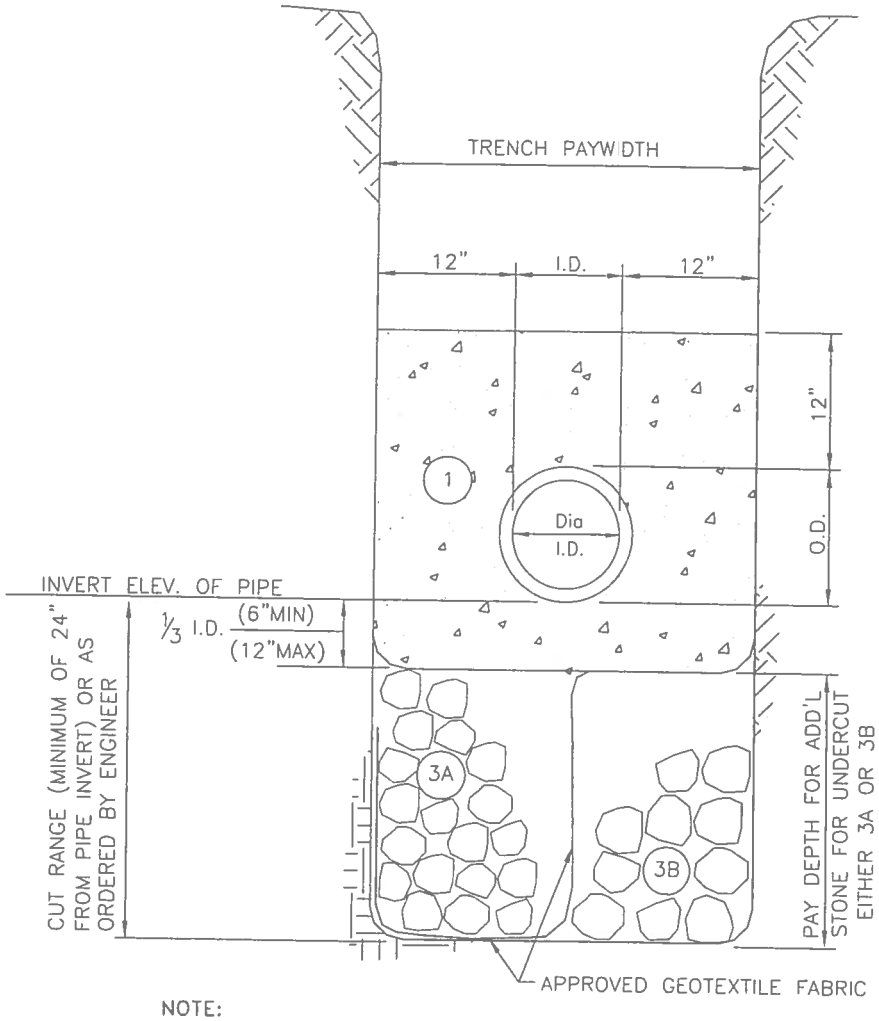

NOTE:

A. TRENCH DETAILS ARE ONLY SHOWN FOR PURPOSES OF MATERIAL PLACEMENT AND MAXIMUM PAY LIMITS.

B. AN OSHA APPROVED MOVABLE PROTECTIVE TRENCH SHIELD SHALL BE USED IN ALL UNSHEETED TRENCH AREAS.

MATERIALS

PIPE BEDDING MATERIAL (NYSDOT LATEST EDITION)

(1) NO.1 CRUSHED STONE WITH A GRADATION CONFORMING WITH NYSDOT SECTION 703-02. THE CRUSHED STONE SHALL BE WELL GRADED WITH NO PARTICLES LARGER THAN 1" AND HAVING A MAXIMUM GRADATION MEETING THE LIMITS DESCRIBED IN THE SPECIFICATIONS. THE BEDDING SHALL BE COMPACTED IN 6" LIFTS WITH EQUIPMENT ACCEPTABLE TO THE PIPE MANUFACTURER.

SELECT MATERIAL BACKFILL (NYSDOT LATEST EDITION)

(3A) NO. 3 RUN OF CRUSHER STONE WITH A GRADATION CONFORMING WITH NYSDOT SECTION 304-2.02 TYPE 1 AND NYSDOT SECTION 703-02. COMPACTED IN 6" LIFTS WITH APPROVED GEOTEXTILE FABRIC.

OR

(3B) NO. 4 RUN OF CRUSHER STONE CONFORMING WITH THE GRADATION NOTED IN NYSDOT SECTION 703-02, TABLE 703-4 SIZE DESIGNATION 4.

NO SLAG SHALL BE ALLOWED FOR MATERIALS (1) (3A) & (3B)

ERIE COUNTY DEPT. OF ENVIRONMENT & PLANNING DIVISION OF SEWERAGE MANAGEMENT	Rev. 1 12/2001	ADDED SELECT FILL MATERIAL 3A & 3B	STD.DETAIL 1A
	Rev. 2		
	File: D-01a	Date: 3/2/99	

SHEETED TRENCH
(JANUARY 2012)

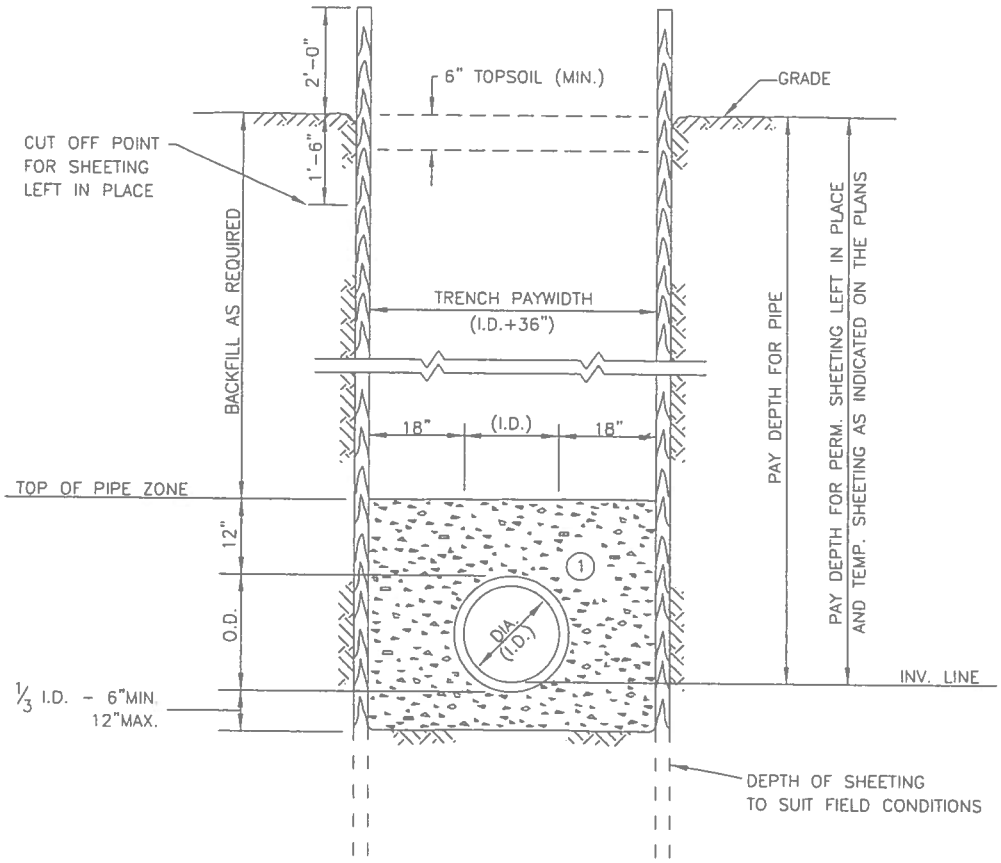

NOTES:

1. MAINTAIN 18" BETWEEN PIPE AND INSIDE FACE OF TEMPORARY SHEETING. IF SHEETING EXTENDS BELOW PIPE INVERT AS SHOWN, WHEN PVC PIPE MATERIAL IS USED, COMPACT MATERIAL (1) BEFORE PULLING THE SHEETING.
2. SHEETED TRENCH OPERATIONS SHALL INCLUDE ALL NECESSARY DEWATERING EQUIPMENT.
3. SHEETING DRIVEN BELOW THE INVERT OF THE PIPE FOR BEDDING MATERIAL AND TOE SUPPORT WILL NOT BE CONSIDERED IN THE FORMULA FOR PAYMENT BUT SHOULD BE FIGURED BY THE CONTRACTOR IN DETERMINING HIS UNIT BID PRICE PER SQUARE FOOT OF SHEETING.
4. WHERE INDICATED ON THE PLANS OR AS ORDERED BY THE ENGINEER, TEMPORARY SHEETING WILL BE PAID FOR UNDER THE APPLICABLE BID ITEM. OTHER AREAS WHERE THE CONTRACTOR ELECTS TO USE TEMPORARY SHEETING NOT PREVIOUSLY AUTHORIZED BY THE ENGINEER SHALL BE AT HIS OPTION AND EXPENSE.

MATERIALS

PIPE BEDDING MATERIAL (NYSDOT LATEST EDITION)

(1) NO.1 CRUSHED STONE WITH A GRADATION CONFORMING WITH NYSDOT SECTION 703-02. THE CRUSHED STONE SHALL BE WELL GRADED WITH NO PARTICLES LARGER THAN 1" AND HAVING A MAXIMUM GRADATION MEETING THE LIMITS DESCRIBED IN THE SPECIFICATIONS. THE BEDDING SHALL BE COMPACTED IN 6" LIFTS WITH EQUIPMENT ACCEPTABLE TO THE PIPE MANUFACTURER.

NOTE: SLAG SHALL NOT BE ALLOWED FOR MATERIALS (1)

ERIE COUNTY DEPT. OF ENVIRONMENT & PLANNING DIVISION OF SEWERAGE MANAGEMENT	Rev. 1 2/7/94	REVISED TOPSOIL DIMENSION	STD.DETAIL
	Rev. 2 6/5/06	UPDATED MATERIALS TO NYSDOT LATEST EDITION	2
	File: d-02	Date: 3/1/91	

SELECT BACKFILL FOR TRENCH PARALLEL TO ROADWAYS

(JANUARY 2012)

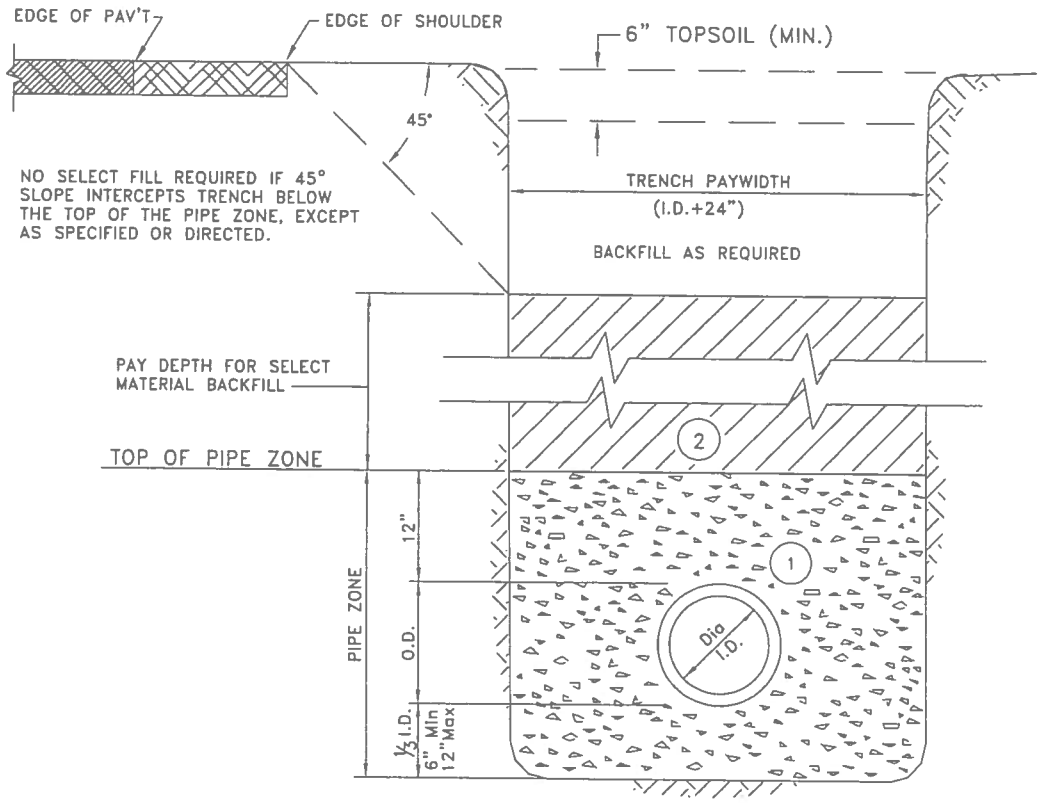

NOTE:

A. TRENCH DETAILS ARE ONLY SHOWN FOR PURPOSES OF MATERIAL PLACEMENT AND MAXIMUM PAY LIMITS.

B. AN OSHA APPROVED MOVABLE PROTECTIVE TRENCH SHIELD SHALL BE USED IN ALL UNSHEETED TRENCH AREAS.

MATERIALS

PIPE BEDDING MATERIAL (NYSDOT LATEST EDITION)

(1) NO. 1 CRUSHED STONE WITH A GRADATION CONFORMING WITH NYSDOT SECTION 703-02. THE CRUSHED STONE SHALL BE WELL GRADED WITH NO PARTICLES LARGER THAN ONE INCH AND HAVING A MAXIMUM GRADATION MEETING THE LIMITS DESCRIBED IN THE SPECIFICATIONS. THE BEDDING SHALL BE COMPACTED IN 6" LIFTS WITH EQUIPMENT ACCEPTABLE TO THE PIPE MANUFACTURER.

SELECT MATERIAL BACKFILL (NYSDOT LATEST EDITION)

(2) NO. 2 RUN OF CRUSHER STONE OR NO. 2 RUN OF CRUSHER GRAVEL WITH A GRADATION CONFORMING WITH NYSDOT SECTION 304-2.02 TYPE 4 AND NYSDOT SECTION 703-02. (COMPACTED IN 6" LIFTS TO 90% DENSITY)

NO SLAG SHALL BE ALLOWED FOR MATERIALS (1) & (2)

ERIE COUNTY DEPT. OF ENVIRONMENT & PLANNING DIVISION OF SEWERAGE MANAGEMENT	Rev. 2 12/28/00	UPDATED MATERIALS TO NYSDOT LATEST EDITION	STD.DETAIL
	Rev. 3 12/01	Updated NYS DOT Editions	4
	File: d-04	Date: 3/1/91	

WATERMAIN CROSSING DETAIL
TYPICAL FOR ENCASEMENT
(JANUARY 2012)

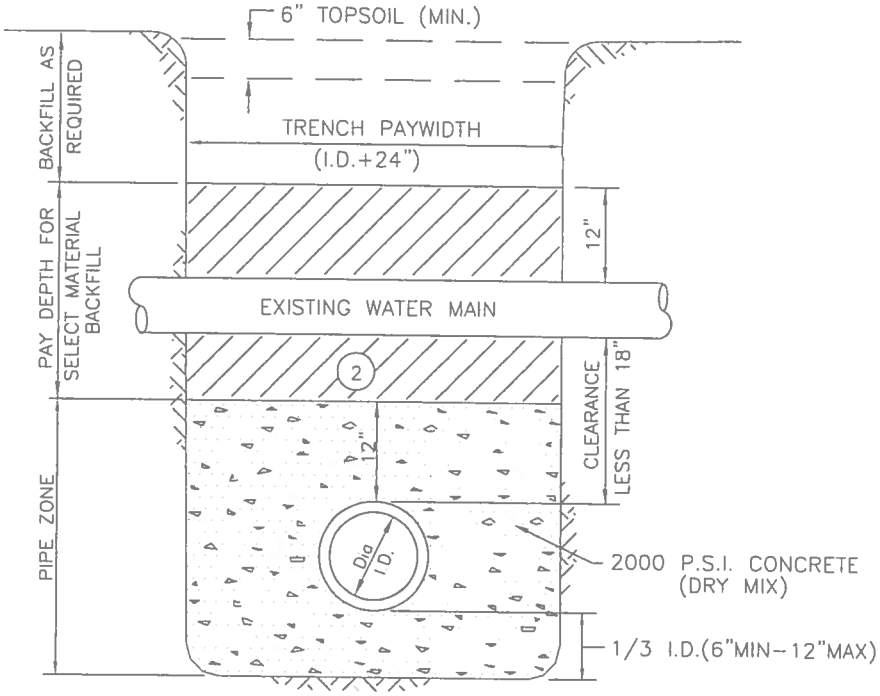

NOTES:

A. IN ALL CASES WHERE THERE IS LESS THAN 18" CLEARANCE BETWEEN EXISTING WATER MAIN AND PROPOSED SEWER (INCLUDING HOUSE LATERALS) THE NEW WORK SHALL BE ENCASED IN CONCRETE AS SHOWN. WHEN A CASING PIPE IS SPECIFIED, NO CONCRETE ENCASEMENT IS REQUIRED.

B. THE CONCRETE ENCASEMENT SHALL EXTEND 3'-0" EACH SIDE OF THE WATER MAIN.

C. SEWERS SHALL BE LAID AT LEAST 10' (3.0 m) HORIZONTALLY FROM ANY EXISTING OR PROPOSED WATERMAIN THE DISTANCE SHALL BE MEASURED EDGE TO EDGE. IN CASES WHERE IT IS NOT PRACTICAL TO MAINTAIN A 10' SEPARATION, THE APPROPRIATE REVIEWING AGENCY MAY ALLOW DEVIATION ON A CASE BY CASE BASIS, IF SUPPORTED BY DATA FROM THE DESIGN ENGINEER. SUCH DEVIATION MAY ALLOW INSTALLATION OF THE SEWER CLOSER TO A WATERMAIN, PROVIDED THE WATERMAIN IS IN A SEPARATE TRENCH OR ON AN UNDISTURBED EARTH SHELF LOCATED ON ONE SIDE OF THE SEWER AND THE ELEVATION OF THE BOTTOM OF THE WATERMAIN IS AT LEAST 18" (46 cm) ABOVE THE TOP OF SEWER.

D. SEWERS CROSSING WATERMAINS SHALL BE LAID TO PROVIDE MINIMUM VERTICAL DISTANCE OF 18" (46 CM) BETWEEN THE OUTSIDE OF THE WATERMAIN AND THE OUTSIDE OF THE SEWER. THIS SHALL BE THE CASE WHEN THE WATERMAIN IS ABOVE OR BELOW THE SEWER. THE CROSSING SHALL BE ARRANGED SO THE JOINTS OF THE SEWER PIPE WILL BE EQUIDISTANT FROM AND AS FAR AWAY FROM THE WATERMAIN JOINTS AS POSSIBLE. WHERE THE WATERMAIN CROSSES UNDER A SEWER, ADEQUATE STRUCTURAL SUPPORT SHALL BE PROVIDED FOR THE SEWER TO PREVENT DAMAGE TO THE WATERMAIN.

E. WHEN IT IS IMPOSSIBLE TO OBTAIN THE PROPER HORIZONTAL AND VERTICAL SEPARATION AS STIPULATED ABOVE, THE SEWER SHALL BE EITHER ENCASED IN CONCRETE OR CONSTRUCTED OF PIPE MATERIAL EQUAL TO THE WATERMAIN AND PRESSURE TESTED AT 150 PSI TO ASSURE WATER TIGHTNESS.

F. TRENCH DETAILS ARE ONLY SHOWN FOR PURPOSES OF MATERIALS PLACEMENT AND MAXIMUM PAY LIMITS.

G. AN OSHA APPROVED MOVABLE PROTECTIVE TRENCH SHIELD SHALL BE USED IN ALL UNSHEETED TRENCH AREAS.

MATERIALS

SELECT MATERIAL BACKFILL (NYSDOT LATEST EDITION)

(2) NO.2 RUN OF CRUSHER STONE OR NO.2 RUN OF CRUSHER GRAVEL WITH A GRADATION CONFORMING WITH NYSDOT SECTION 304-2.02 TYPE 4 AND NYSDOT SECTION 703-02. (COMPACTED IN 6"LIFTS TO 90% DENSITY)

NOTE: SLAG SHALL NOT BE ALLOWED FOR MATERIALS (2)

ERIE COUNTY
DEPT. OF ENVIRONMENT & PLANNING
DIVISION OF SEWERAGE MANAGEMENT

Revisions	
2/7/94	ADDED 6" TOPSOIL(MIN.) & NOTE F&G
01/03/01	REVISED NOTE A
12/01	Revised Note "A"
File: d-05	Date: 3/1/91

STD.DETAIL
5

TYPICAL CONCRETE ENCASEMENT DETAIL

(JANUARY 2012)

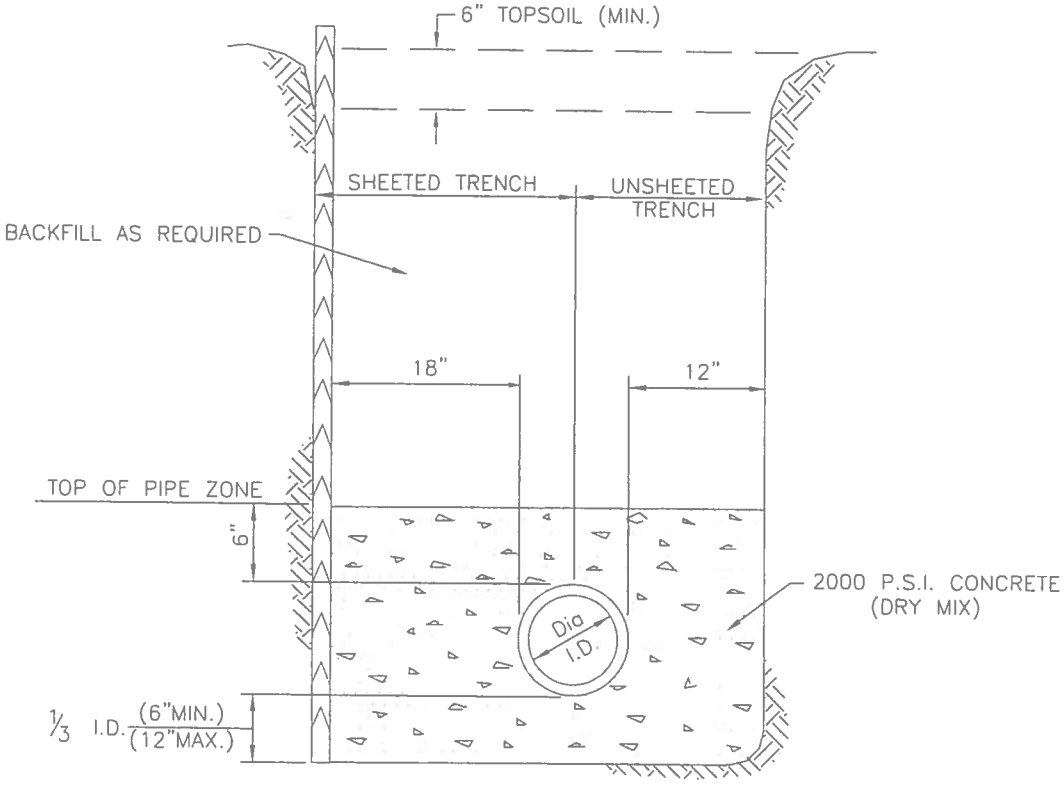

TYPICAL CONCRETE ENCASEMENT NOTES:

1. USE AS REQUIRED BY TEN STATE STANDARDS, OR AS ORDERED BY ENGINEER.
2. REQUIRED WHEN SEWER HAS LESS THAN 4 FEET OF COVER IN PAVED AREAS.

ERIE COUNTY
DEPT. OF ENVIRONMENT & PLANNING
DIVISION OF SEWERAGE MANAGEMENT

Revisions

8/23/91	ADDED 6" DIMENSION ABOVE SEWER
6/4/93	DELETED DEPTH REFERENCE NOTE
2/7/94	ADDED 6" TOPSOIL(MIN.) & NOTE
6/9/05	ADDED NOTES 1&2

File: d-06 Date: 3/1/91

STD.DETAIL 6

PAVEMENT AND DRIVEWAY REPLACEMENT DETAIL
(JANUARY 2012)

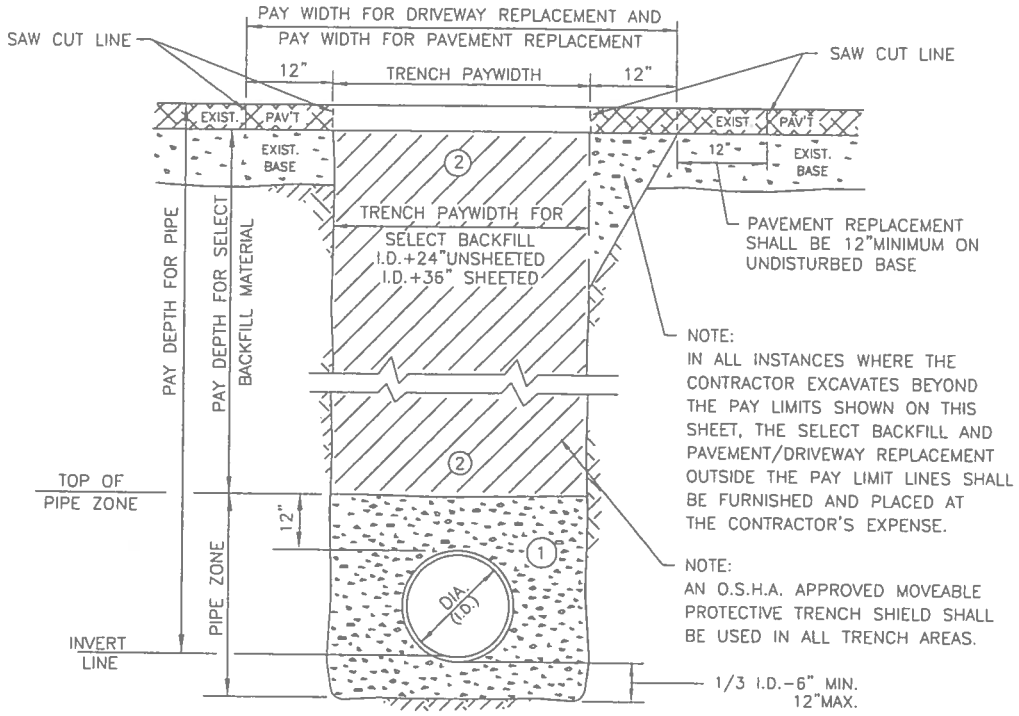

BLACKTOP REPLACEMENT

ALL ROADS AND DRIVEWAYS SHALL BE RECONSTRUCTED WITH A MIN. 3" COURSE OF BINDER AND A 1-1/2" TOP COURSE. APPLICABLE HIGHWAY PERMIT CONDITIONS SHALL GOVERN.

TEMP. PAV'T.

1. IF CONSTRUCTION IS PERFORMED BETWEEN OCTOBER 1 AND APRIL 1, THE CONTRACTOR IS REQUIRED TO PROVIDE 4" OF COLD PATCH FOR ALL PAVEMENT CUTS.
2. ALL OPEN CUTS WITHIN 50' OF AN INTERSECTION SHALL BE TOPPED WITH 4" OF COLD PATCH REGARDLESS OF THE TIME OF YEAR.
3. ALL ROAD CUTS ON HEAVILY TRAVELED ROADWAYS WILL REQUIRE 4" OF COLD PATCH (GENERALLY STATE AND COUNTY HIGHWAYS)
4. ALL TEMPORARY PAVEMENT PATCHES SHALL BE MAINTAINED BY THE CONTRACTOR.

SAW CUTS

1. PAVEMENT/DRIVEWAY CUTS BY THE CONTRACTOR WILL BE MADE WITH A SAW, PNEUMATIC SPADE OR OTHER ACCEPTED MEANS PRIOR TO EXCAVATION.
2. FINAL PAVEMENT/DRIVEWAY RESTORATION: THE CONTRACTOR WILL BE RESPONSIBLE TO SAW CUT AN ADDITIONAL 12" ON EACH SIDE OF THE DISTURBED TRENCH AREA, SO AS TO PROVIDE A UNIFORM STRAIGHT EDGE. THE CUT EDGE WILL THEN BE COATED WITH A BITUMINOUS SEAL COAT AND REPLACED IN THE MANNER DESCRIBED ABOVE.

CONCRETE DRIVEWAY REPLACEMENT

1. THE CONTRACTOR SHALL REMOVE ALL CONCRETE DAMAGE BY HIS OPERATION. THE EXISTING CONCRETE AT THE DAMAGED EDGE SHALL BE SAW CUT TO PROVIDE A STRAIGHT EDGE JOINT BETWEEN OLD AND NEW, WITH EXPANSION JOINT MATERIAL INSTALLED AT THE TRANSITION. THE CONTRACTOR SHALL BE REQUIRED TO RECONSTRUCT THE DRIVEWAY WITH 4000 PSI CONCRETE MATCHING THE DEPTH AND WIDTH OF THE EXISTING DRIVEWAY.

MATERIALS

PIPE BEDDING MATERIAL (NYSDOT LATEST EDITION)

(1) NO.1 CRUSHED STONE WITH A GRADATION CONFORMING WITH NYSDOT SECTION 703-02. THE CRUSHED STONE SHALL BE WELL GRADED WITH NO PARTICLES LARGER THAN 1" AND HAVING A MAXIMUM GRADATION MEETING THE LIMITS DESCRIBED IN THE SPECIFICATIONS. THE BEDDING SHALL BE COMPACTED IN 6" LIFTS WITH EQUIPMENT ACCEPTABLE TO THE PIPE MANUFACTURER.

SELECT MATERIAL BACKFILL (NYSDOT LATEST EDITION)

(2) NO.2 RUN OF CRUSHER STONE OR NO.2 RUN OF CRUSHER GRAVEL WITH A GRADATION CONFORMING WITH NYSDOT SECTION 304-2.02 TYPE 4 AND NYSDOT SECTION 703-02. (COMPACTED IN 6"LIFTS TO 90% DENSITY)

NOTE: SLAG SHALL NOT BE ALLOWED FOR MATERIALS (1) AND (2)

ERIE COUNTY DEPT. OF ENVIRONMENT & PLANNING DIVISION OF SEWERAGE MANAGEMENT	Rev. 2	REVISED PAY LIMITS FOR TRENCH	STD.DETAIL
	Rev. 3 01/03/01	REVISED TITLE AND PAY WIDTH NOTE	8
	Rev. 4 12/01	Added conc. driveway replace. note	
	File: d-08	Date: 3/1/91	

PIPE CROSSING SUPPORT DETAIL

(JANUARY 2012)

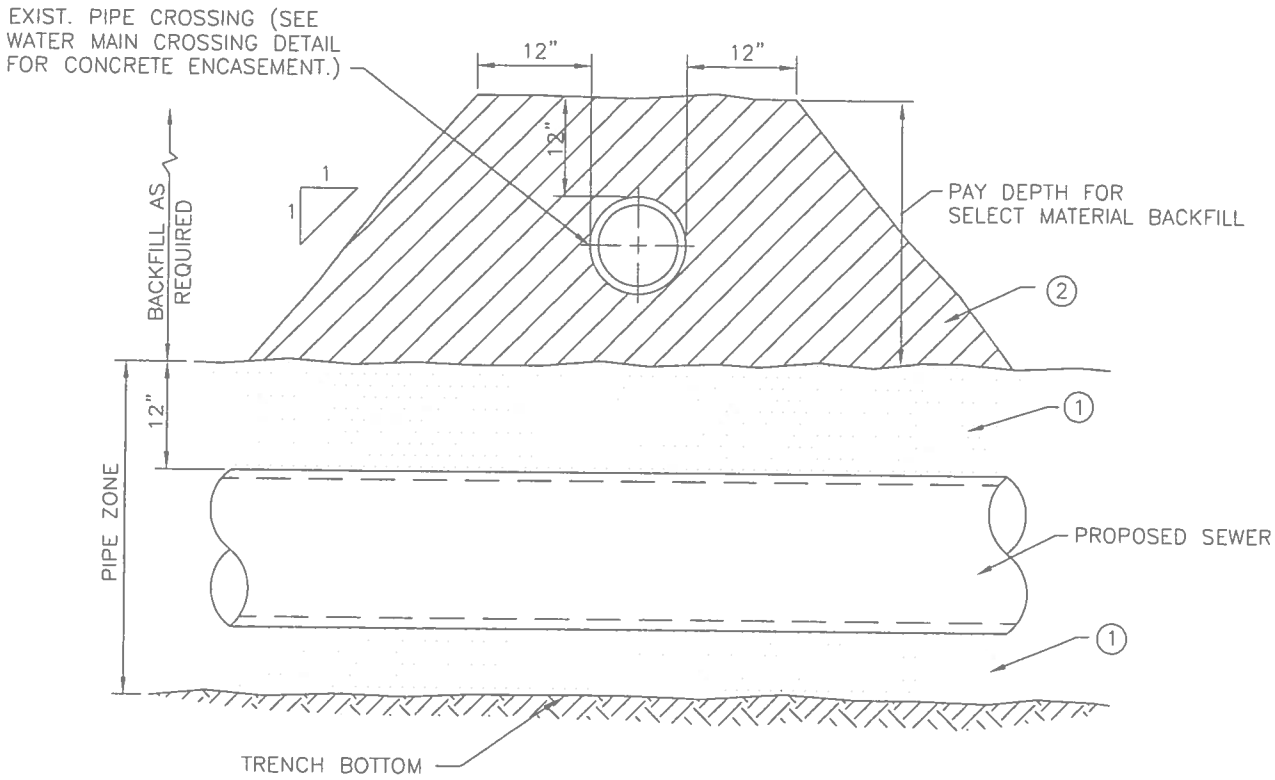

MATERIALS

PIPE BEDDING MATERIAL (NYSDOT LATEST EDITION)

(1) NO.1 CRUSHED STONE WITH A GRADATION CONFORMING WITH NYSDOT SECTION 703-02. THE CRUSHED STONE SHALL BE WELL GRADED WITH NO PARTICLES LARGER THAN 1" AND HAVING A MAXIMUM GRADATION MEETING THE LIMITS DESCRIBED IN THE SPECIFICATIONS. THE BEDDING SHALL BE COMPACTED IN 6" LIFTS WITH EQUIPMENT ACCEPTABLE TO THE PIPE MANUFACTURER.

SELECT MATERIAL BACKFILL (NYSDOT LATEST EDITION)

(2) NO.2 RUN OF CRUSHER STONE OR NO.2 RUN OF CRUSHER GRAVEL WITH A GRADATION CONFORMING WITH NYSDOT SECTION 304-2.02 TYPE 4 AND NYSDOT SECTION 703-02. (COMPACTED IN 6"LIFTS TO 90% DENSITY)

NOTE: SLAG SHALL NOT BE ALLOWED FOR MATERIALS (1) AND (2)

ERIE COUNTY DEPT. OF ENVIRONMENT & PLANNING DIVISION OF SEWERAGE MANAGEMENT	Rev. 1 12/01	UPDATED MATERIALS TO NYSDOT LATEST EDITION	STD.DETAIL 9
	Rev. 2		
	File: d-09	Date: 3/1/91	

MONOLITHIC PRECAST BASE MANHOLES
4'-0" DIA. BASE FOR 15"ø SEWERS OR LESS
(JANUARY 2012)

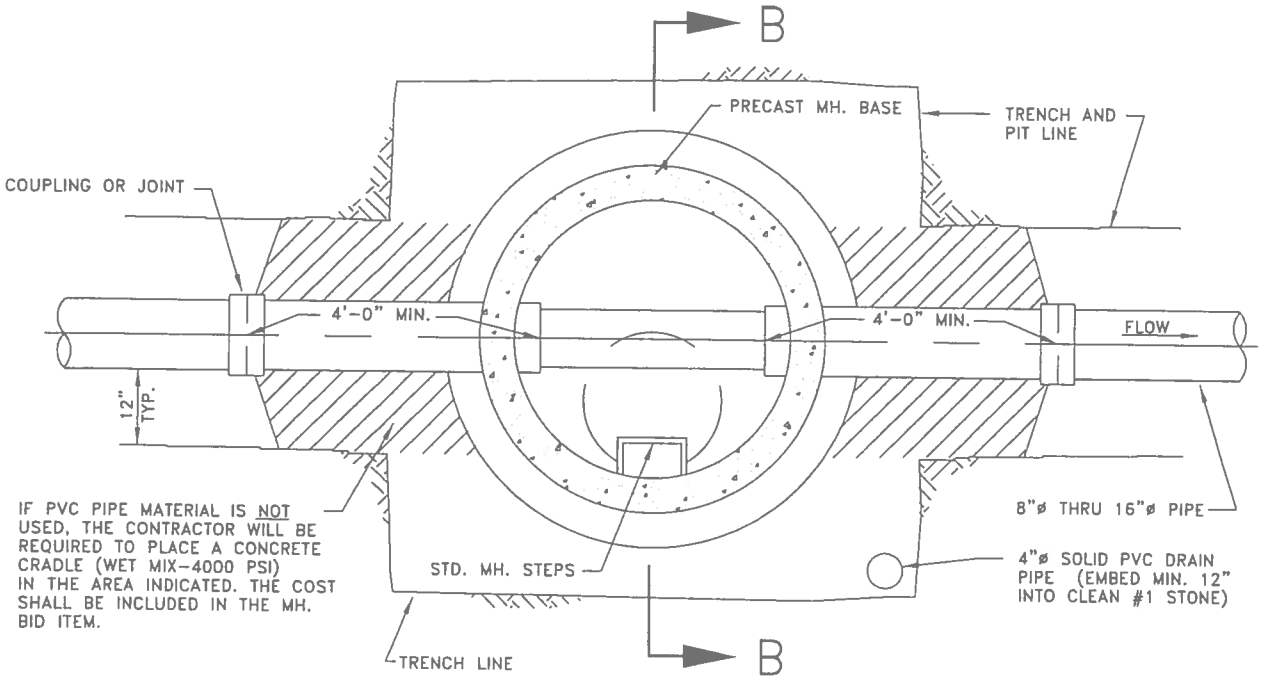

PLAN

ERIE COUNTY DEPT. OF ENVIRONMENT & PLANNING DIVISION OF SEWERAGE MANAGEMENT	Rev. 1 12/01	REVISED 4" PVC TO SOLID PIPE IN #1 STONE BED	STD.DETAIL 10
	Rev. 2		
	File: d-10	Date: 3/1/91	

MONOLITHIC PRECAST BASE MANHOLES 4'-0" DIA. BASE FOR 15"ø SEWERS OR LESS (SECTION B-B)

(JANUARY 2012)

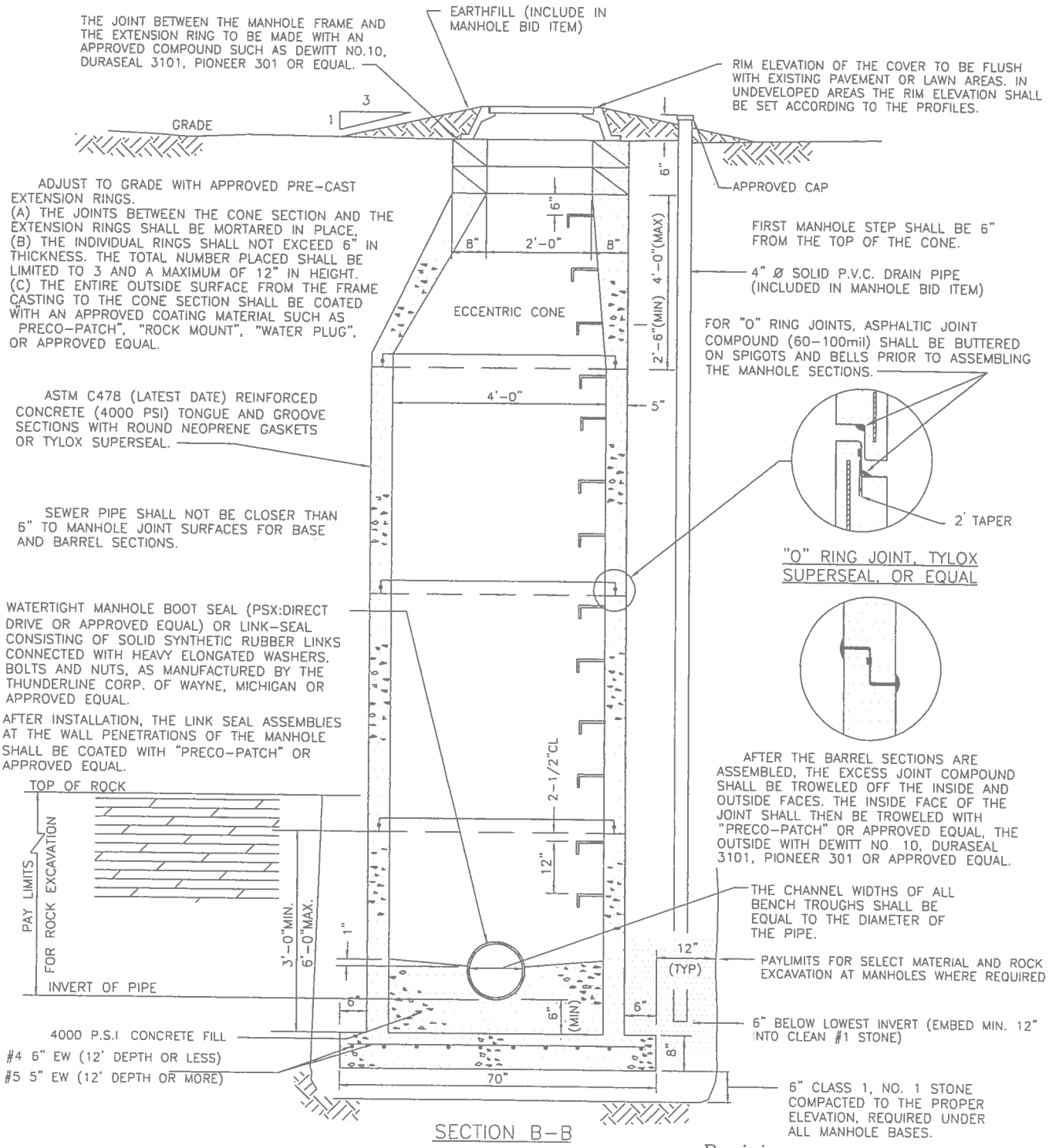

SECTION B-B

Revisions

07/15/99	ADD ROCK EXCAVATION PAYLIMITS
11/23/99	ADD 4"x4"x6' MARKER AND NOTES
12/01	REVISED 4" P.V.C. TO SOLID PIPE
03/04/03	ADDED WATER TIGHT BOOT SEAL NOTE
06/22/05	ADDED TYLOX SUPERSEAL NOTES REMOVED WOOD POST AND NOTES
02/27/07	CHANGED THE NUMBER OF EXTENSION RINGS FROM 2 TO 3
File: d-11	Date: 3/1/91

ERIE COUNTY
DEPT. OF ENVIRONMENT & PLANNING
DIVISION OF SEWERAGE MANAGEMENT

STD.DETAIL

11

MONOLITHIC PRECAST BASE MANHOLES
PIPE SIZES 18"ø THRU 36"ø
(JANUARY 2012)

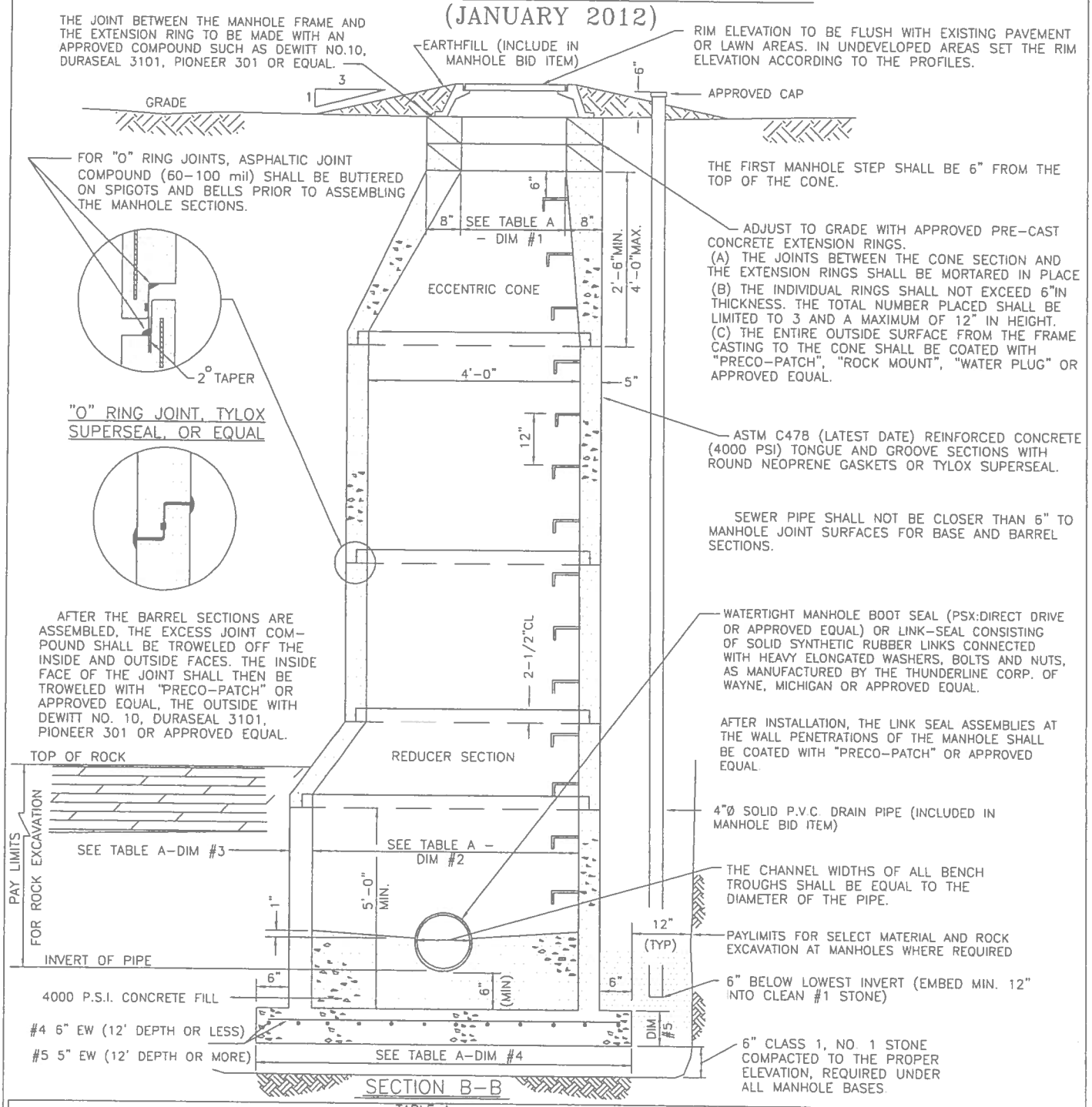

TABLE A

PIPE SIZE	DIMENSION #1	DIMENSION #2	DIMENSION #3	DIMENSION #4	DIMENSION #5
18"	24"	5'-0"	6"	84"	8"
21"- 27"	36"	6'-0"	7"	98"	8"
30"- 36"	36"	8'-0"	9"	126"	14"

REVISIONS

12/9/96	CHANGED JOINT COMPOUND TO ASPHALTIC (60-100 mil)
07/15/99	ADD ROCK ELEVATIONS
12/01	REVISED 4" P.V.C. TO SOLID PIPE
03/04/03	ADDED WATER TIGHT BOOT SEAL NOTE
06/22/05	ADDED TYLOX SUPERSEAL NOTES
02/27/07	CHANGED THE NUMBER OF EXTENSION RINGS FROM 2 TO 3

ERIE COUNTY
DEPT. OF ENVIRONMENT & PLANNING
DIVISION OF SEWERAGE MANAGEMENT

File: d-12 Date: 3/1/91

STD.DETAIL 12

STANDARD FRAME AND COVER

(DECEMBER 2013)

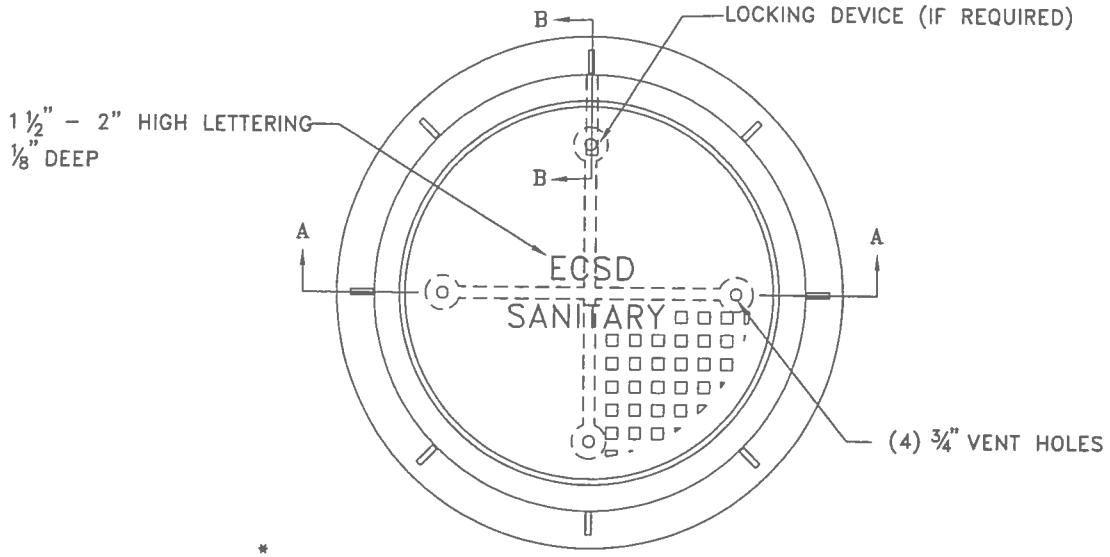

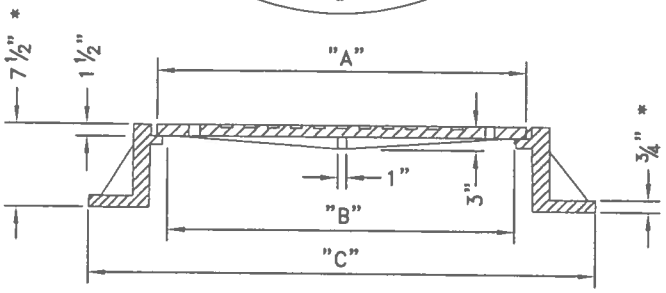

SECTION A–A

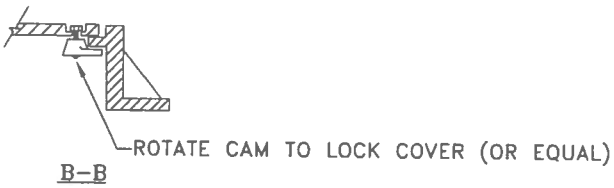

B–B

LOCKING DEVICE IF REQUIRED

TABLE				
PIPE SIZE	DIMENSION "A"	DIMENSION "B"	DIMENSION "C"	WEIGHT OF COVER
8" THRU 18"	24"	22 1/4"	35"(MAX.)	150 LB. ± 5%
OVER 18"	32"	30"	46"(MAX.)	200 LB. ± 5%

STANDARD FRAME AND COVER NOTES

1. MATERIAL: ASTM A48 CLASS 30B CAST IRON CONFORMING TO AASHTO DESIGNATION M105–06.
2. UNIT MUST WITHSTAND H–20 WHEEL LOADING, AND CONFORM TO AASHTO DESIGNATION M306–10.
3. ALL DIMENSIONS ARE TO BE CONSIDERED MINIMUM WITH THE EXCEPTION OF THE COVER, WHICH MUST CONFORM EXACTLY TO MAINTAIN INTERCHANGEABILITY WITHIN THE COUNTY.
4. COATING NOT REQUIRED.
5. FRAMES AND COVERS SHALL HAVE MACHINED BEARING SURFACES.
6. LOCKING DEVICE MUST BE SITUATED TO ALLOW EASY REMOVAL OF COVER.
7. NO LETTERING OTHER THAN ECSD SANITARY WILL BE ALLOWED ON THE EXPOSED SURFACE OF THE COVER.
8. * 1/2" FLANGE THICKNESS AND 7" HEIGHT ACCEPTABLE IF CLASS 35 CAST IRON MATERIAL PROVIDED.

ERIE COUNTY
DEPT. OF ENVIRONMENT & PLANNING
DIVISION OF SEWERAGE MANAGEMENT

Rev. 1	4/9/96	REV'D PIPE SIZE TO OVER 18"
Rev. 2	12/9/96	REV'D <18" DIMENSIONS
Rev. 3	5/5/03	REV'D FRAME & LOCKS
Rev. 4	6/28/06	ADDED WEIGHTS TO TABLE
Rev. 5	12/26/13	REVISED NOTES 1 & 2 TO REFERENCE AASHTO STANDARDS AND ADDED NOTE 8

File: d–13 Date: 3/1/91

STD.DETAIL 13

STANDARD MANHOLE STEP
(JANUARY 2012)

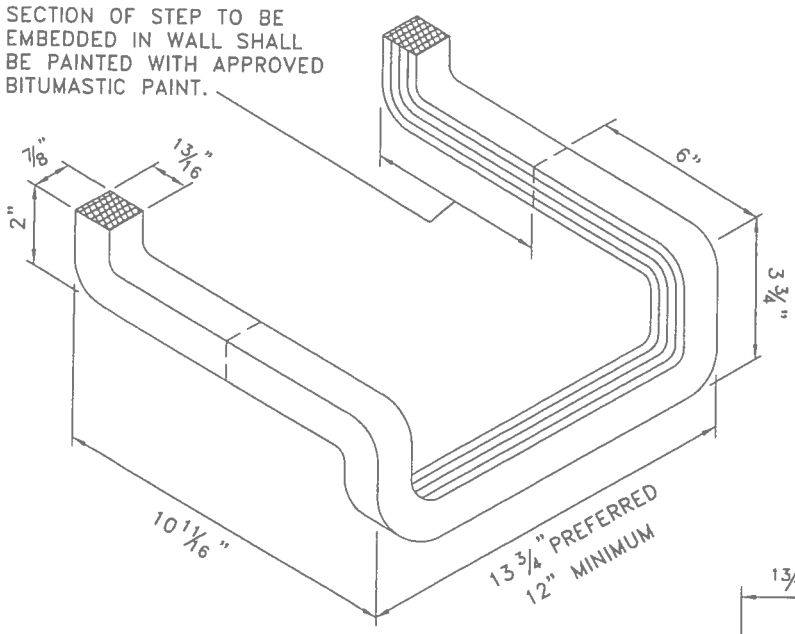

(DROP FRONT TYPE)

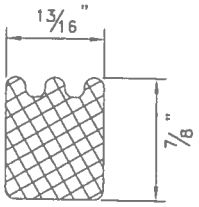

TYPICAL SECTION

NOTES:

1. MANHOLE STEPS SHALL BE OF FORGED ALUMINUM ALLOY.
2. AN ACCEPTABLE ALTERNATE IS THE STEEL REINFORCED COPOLYMER POLYPROPYLENE MANHOLE STEP.
3. THE STEPS SHALL BE EMBEDDED IN THE WALLS OF THE CONCRETE MANHOLE BARREL WHILE THE MANHOLE IS BEING CAST OR SECURELY GROUTED IN PLACE AFTER CASTING.

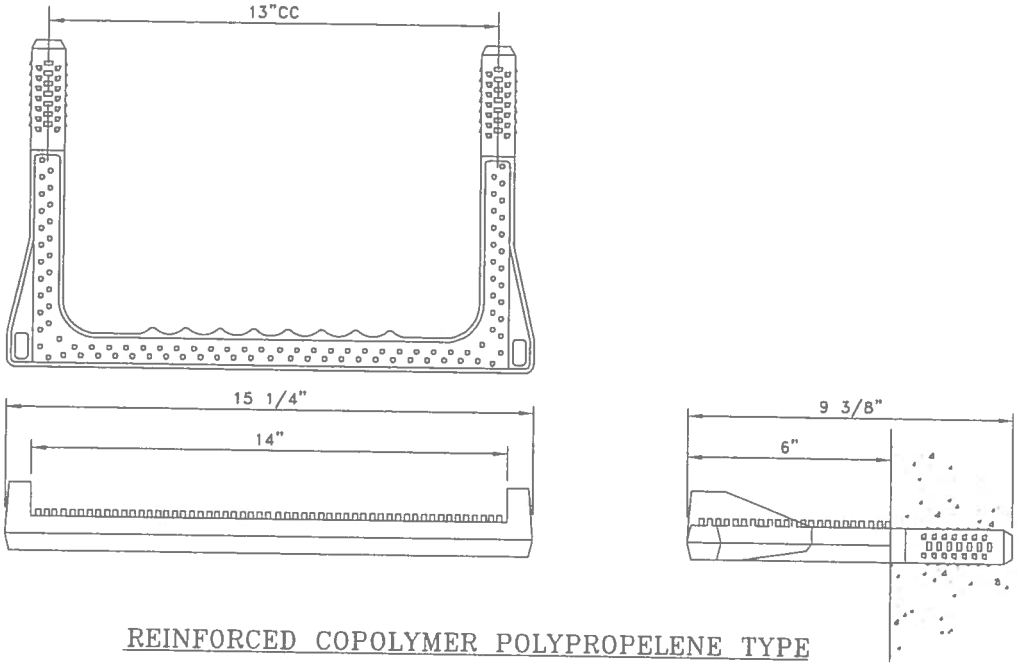

REINFORCED COPOLYMER POLYPROPELENE TYPE

ERIE COUNTY DEPT. OF ENVIRONMENT & PLANNING DIVISION OF SEWERAGE MANAGEMENT	Rev. 1 12/9/96	ADDED REINFORCED COLPOLYMER TYPE STEP	STD.DETAIL 17
	Rev. 2		
	File: d-17	Date: 3/1/91	

INSIDE DROP PIPE
(JANUARY 2012)

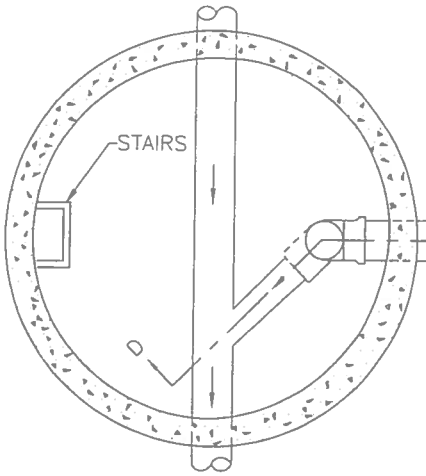

PLAN

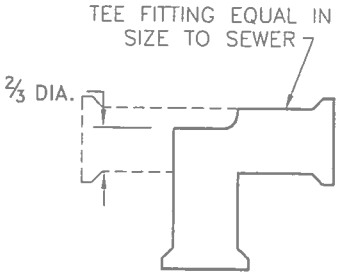

"TEE CUTOUT"

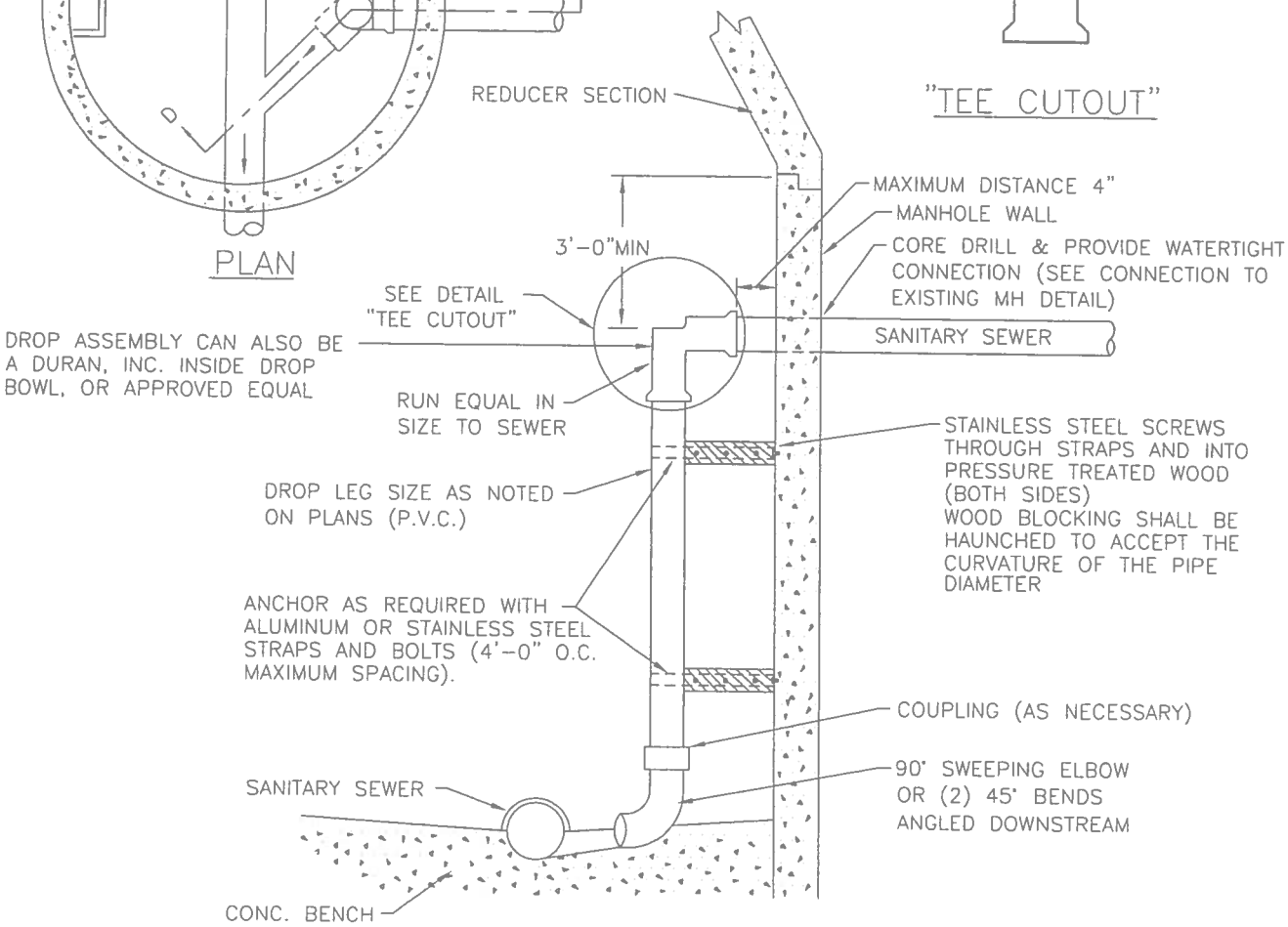

SECTION D-D

NOTES:

1. A DROP PIPE SHALL BE PROVIDED FOR A SEWER ENTERING A MANHOLE AT AN ELEVATION OF 24 INCHES OR MORE ABOVE THE MANHOLE INVERT. ONLY INSIDE DROP ASSEMBLIES WILL BE ALLOWED.
2. INSIDE DROP LEG SHALL BE INSTALLED ON MANHOLE WALL LOCATED AS SHOWN OR AS APPROVED BY ECDSM
3. ON NEW CONSTRUCTION INSIDE DROP ASSEMBLIES SHALL BE INSTALLED IN MANHOLES NOT LESS THAN 5'-0" IN DIAMETER.

PIPE SIZE	MANHOLE I. D.
18"	5'-0"
21"- 27"	6'-0"
30"- 36"	8'-0"

REVISIONS

4/24/93	CHANGED TEE CUTOUT
6/1/93	BENCH CONFIGURATION & REDUCER SECTION CLEARANCE
2/7/94	CHANGED MAX. DIST. FROM MH TO TEE ADDED STAINLESS STEEL BOLTS,SCREWS
7/13/99	CHANGED NOTE NO.2, ADD SIZE CHART
12/22/00	REVISED TEE CUTOUT & SPACERS NOTE
6/23/05	ADDED DURAN, INC. DROP BOWL NOTE

File: D-18 Date: 3/1/91

ERIE COUNTY
DEPT. OF ENVIRONMENT & PLANNING
DIVISION OF SEWERAGE MANAGEMENT

STD.DETAIL
18

TREE REMOVAL AND REPLACEMENT POLICY

(JANUARY 2012)

GENERAL CONDITIONS

1. REMOVE AS INDICATED WITH AN ("R") ALL TREES UNDER 8" IN DIAMETER AND OFFER PROPERTY OWNER A REPLACEMENT TREE OF THE SAME SPECIES ON A ONE FOR ONE BASIS.
2. REMOVE AS INDICATED WITH AN ("R") ALL TREES 8" IN DIAMETER AND OVER, THEN OFFER THE PROPERTY OWNER REPLACEMENT TREES OF THE SAME SPECIES ON A TWO FOR ONE BASIS.
3. TREES MARKED "R1" SHALL BE REPLACED ON A ONE FOR ONE BASIS REGARDLESS OF SIZE. TREES MARKED "R2" SHALL NOT BE REPLACED AT ALL. ALL"R2" AREAS SHALL BE GRADED, TOPSOILED AND HYDROSEEDED UNLESS OTHERWISE NOTED.
4. THE CONTRACTOR SHALL CONSIDER IN HIS BID ALL COSTS ASSOCIATED WITH THE REMOVAL OF EXISTING TREES AND PROVIDING AND PLANTING THE REPLACEMENT TREES (MIN 3" DIA). NO ADDITIONAL COMPENSATION WILL BE PROVIDED.
5. THE CONTRACTOR SHALL, FOR THOSE TREES SO MARKED ("T") TUNNEL, BID THE ITEM TO TUNNEL OR BORE AND JACK THE SEWER PAST THE TREE.
6. IF THE TREE IS OVER 15" IN DIAMETER AND THE TRENCH IS OVER 8' FROM THE TRUNK BUT STILL WITHIN THE DRIP LINE, THE TREES CROWN MUST BE PRUNED BACK TO COMPENSATE FOR LOSS OF ROOT STRUCTURE.
7. IF THE PROPERTY OWNER AGREES IN WRITING, HEALTHY TREES MAY BE REMOVED FROM THE EASEMENT REGARD-LESS OF VARIETY OR SIZE.
8. THE CONTRACTOR SHALL RETAIN THE SERVICES OF A QUALIFIED NURSERY MAN DURING THE LIFE OF THE CONTRACT.

SPECIAL CONDITIONS

1. FOR AREAS WITHIN THE HIGHWAY RIGHT-OF-WAY THE CONTRACTOR SHALL REMOVE ALL TREES INDICATED WITH AN "R" AND PROVIDE REPLACEMENT TREES AS DESCRIBED IN THE "GENERAL CONDITIONS". THE PLANTING OF THE REPLACEMENT TREES SHALL BE OUTSIDE THE RIGHT-OF-WAY LINE ONLY AFTER THE CONTRACTOR RECEIVES A RELEASE FROM THE PROPERTY OWNER ALLOWING THE PLANTING ON THEIR PROPERTY. THE NEW REPLACEMENT TREE(S) SHALL BE PLANTED IN AN AREA NEAR THE HIGHWAY RIGHT-OF-WAY AT A MINIMUM DISTANCE OF 8'-0" AWAY FROM THE INSTALLED PIPELINE. ALL ADDITIONAL SITE RESTORATION CAUSED BY THE NEW TREE PLANTING SHALL BE THE RESPONSIBILITY OF THE CONTRACTOR AND SHALL BE COMPLETED AT NO ADDITIONAL COST TO THE COUNTY.

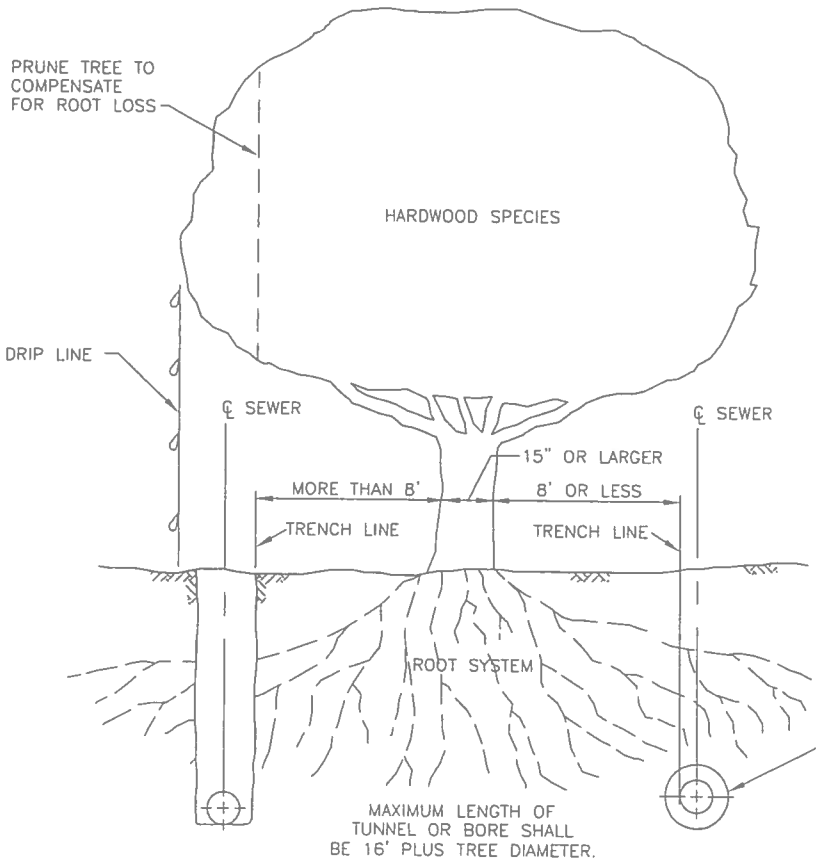

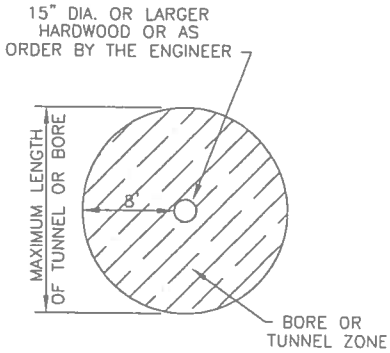

TREES NOT INDICATED FOR TUNNELING BUT REQUIRED IN THE FIELD SHALL BE PAID FOR UNDER THE CONTINGENT ITEM OR AS DESCRIBED IN DIVISION 1.

TUNNEL USING STEEL CASING PIPE OR JACK & BORE IN ACCORDANCE WITH THE ROAD CROSSING METHOD AS OUTLINED IN DETAIL "A", SHEET D-4, (ROAD CROSSING BY JACKING AND BORING METHOD). STEEL CASING PIPE SHALL BE OF THE SIZE AND THICKNESS AS SHOWN IN THE ROAD X-ING BY JACKING AND BORING METHOD DETAIL.

7/12/99	REVISED NOTES FOR 8" TO OVER CONDITIONS TO GENERAL & SPECIAL	S
Rev. 2		20
File: d-20	c: 3/1/91	

TYPICAL HOUSE SERVICE DETAIL
(JANUARY 2012)

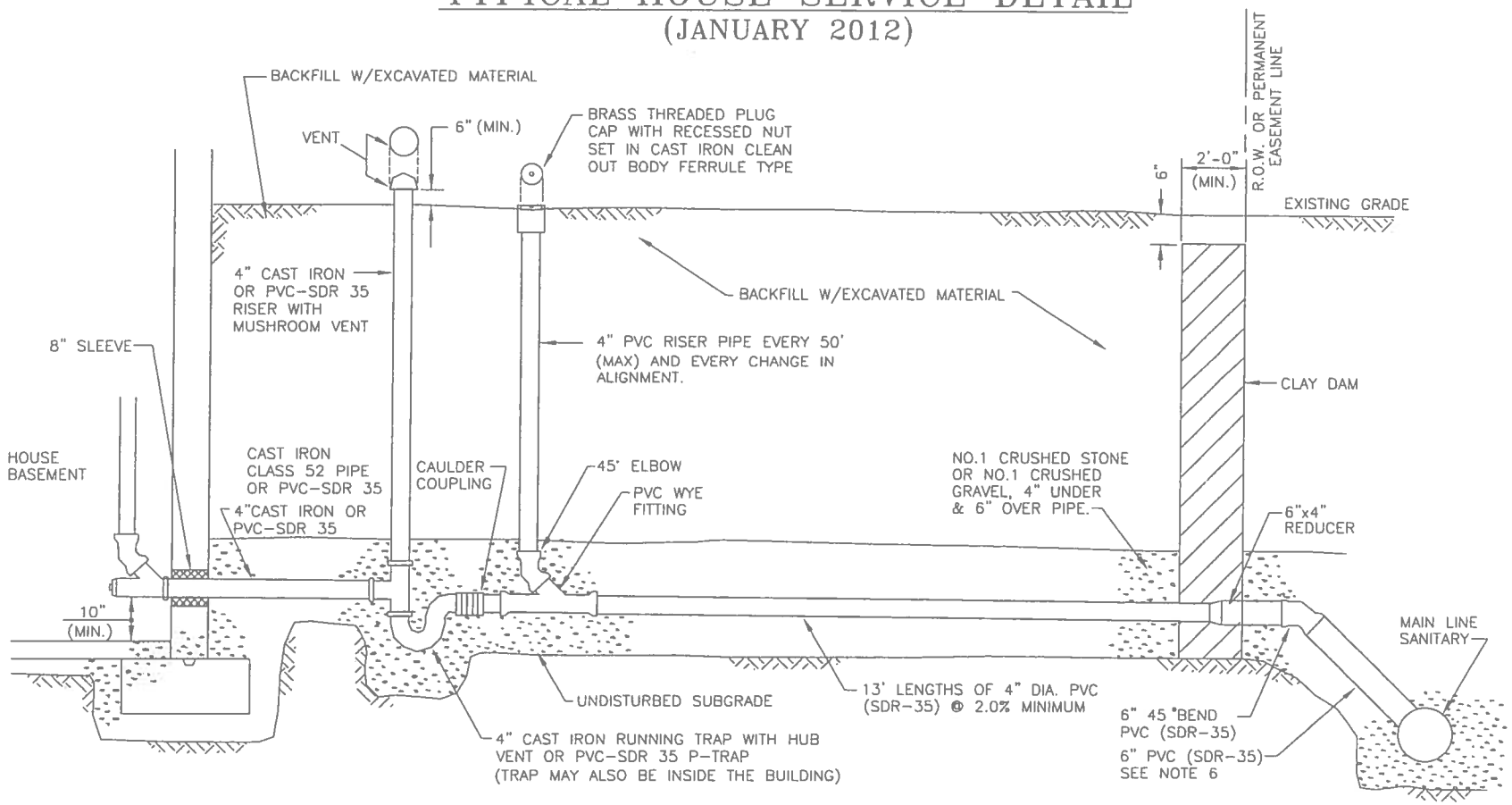

NOTES:

1. NO INSPECTION WILL BE PROVIDED WITHOUT A PERMIT. INSPECTIONS REQUIRE 48 HR. ADVANCE NOTICE FOR SCHEDULING.
2. ALL WORK MUST BE INSPECTED BY A COUNTY INSPECTOR
3. PVC PIPE MATERIAL SHALL BE MANUFACTURED IN ACCORDANCE WITH THE REQUIREMENTS OF THE LATEST ASTM SPECIFICATION D-3033/D-3034. CAST IRON PIPE MATERIAL SHALL BE EXTRA HEAVY CAST IRON MEETING THE REQUIREMENTS OF ASTM A74-42.
4. A MANUAL VALVE SHALL BE INSTALLED ON BASEMENT LAUNDRY DRAIN LINE.
5. VENTS AND CLEAN OUTS MUST BE INSTALLED IN LAWN AREAS, NOT IN SIDEWALK OR DRIVEWAY AREAS, PREFERABLY BETWEEN THE CURB OR EDGE OF PAVEMENT, AND THE SIDEWALK.
6. SELECT BACKFILL REQUIRED UNDER PAVED AREAS.
7. CONCRETE ENCASEMENT IF COVER DEPTH IS LESS THAN 4'-0" UNDER PAVED AREAS
8. FOR NEW CONSTRUCTION, AN 8x6 WYE WITH 6" PVC TO 6" 45° BEND, THEN 6" x 4" REDUCER IS USED.
9. A 6" CLEAN OUT IS REQUIRED AT R.O.W. WHENEVER THE MAIN SEWER IS UNDER THE PAVEMENT LIMITS OR AT FAR SIDE OF PAVEMENT.
10. ANY EXCAVATION TO BE LEFT OPEN OVERNIGHT SHALL BE COMPLETELY ENCLOSED IN FENCING, OR WHERE NECESSARY, COVERED WITH STEEL PLATES.
11. DOWN SPOUTS, SUMP PUMPS, AND FOOTING DRAINS ARE NOT PERMITTED TO BE CONNECTED TO THE HOUSE LATERAL.
12. FOR NEW STRUCTURES, NO CONNECTION SHALL BE MADE UNTIL BUILDING ROOF IS ERECTED AND BASEMENT FLOOR IS POURED.

ERIE COUNTY
DEPT. OF ENVIRONMENT & PLANNING
DIVISION OF SEWERAGE MANAGEMENT

Rev. 6/05	ADDED NOTE 20 & CLASS 52 TYPE CI PIPE
Rev. 1/07	REMOVED OLD NOTES 1,3,8,10,12,13 AND 20 REVISED TO 6"PVC-DET6, 48 HR ADV NOTICE
Rev. 11/08	ADDED PVC TRAP AND SLEEVE
Rev. 01/12	REVISED 4" CAST IRON TRAP
File: d-21	Date: 3/1/91

STD. DETAIL
21

TYPICAL CROSS SECTION OF HIGHWAY CROSSING FOR HOUSE/ COMMERCIAL LATERALS

(JANUARY 2012)

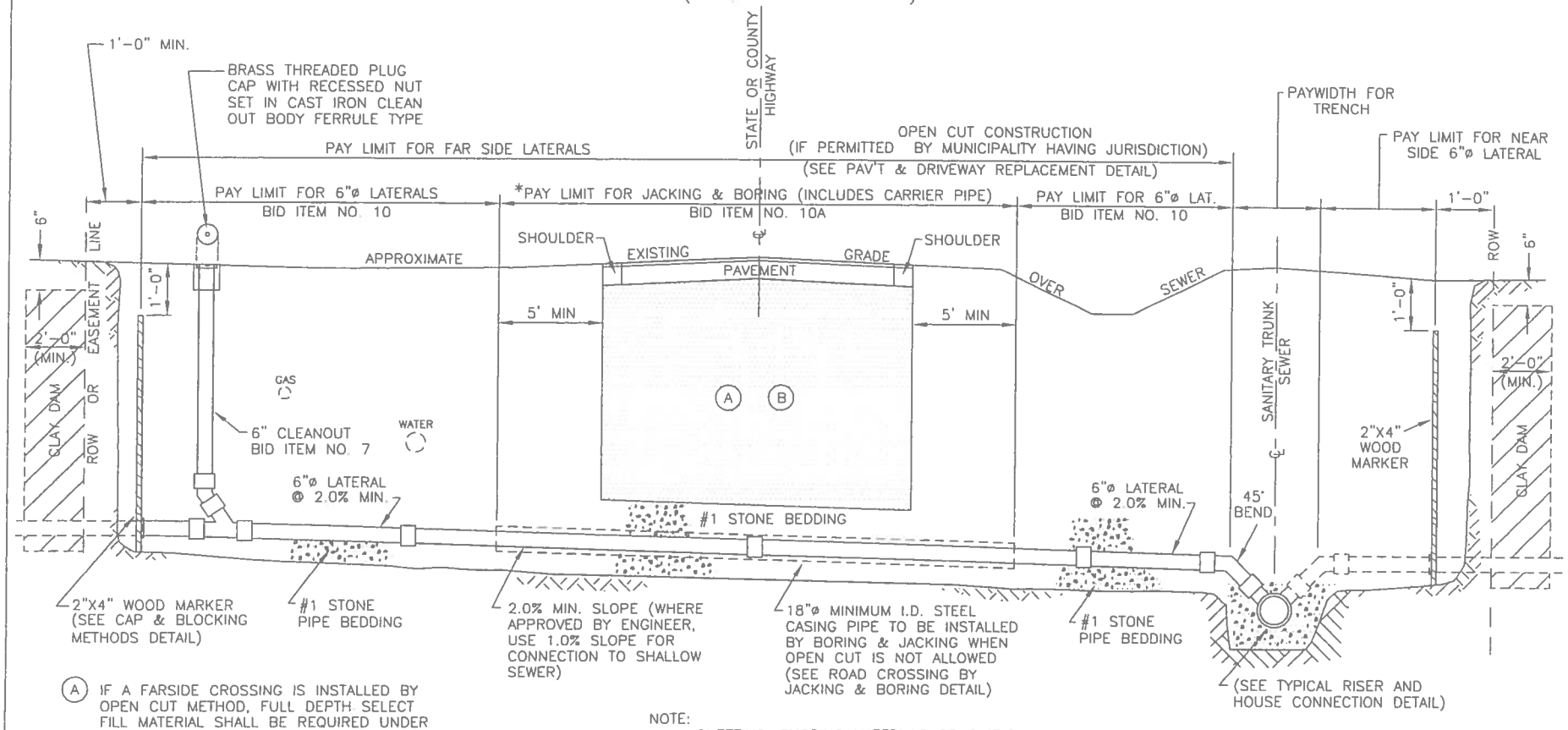

(A) IF A FARSIDE CROSSING IS INSTALLED BY OPEN CUT METHOD, FULL DEPTH SELECT FILL MATERIAL SHALL BE REQUIRED UNDER PAVEMENT & SHOULDER AREA AS DESCRIBED IN SECTION 01020- ITEM15 DESCRIPTION OF BID ITEMS-ECDEP SPECIFICATIONS.

(B) NO. 2 RUN OF CRUSHER STONE WITH A GRADATION CONFORMING WITH NYSDOT SECTION 304-2.02 TYPE 4 AND NYSDOT SECTION 703-02 (LATEST EDITION) COMPACTED IN 6" LIFTS TO 90% DENSITY.

NOTE:

SHEETING, SHORING MATERIALS OR SHIELD SYSTEM NOT SHOWN.

* LENGTH OF PAY LIMIT FOR JACKING AND BORING VARIES IN ACCORDANCE WITH DIMENSIONS SHOWN ON THE PLAN SHEETS.

* CONCRETE ENCASEMENT IF COVER DEPTH IS LESS THAN 4'-0" UNDER PAVED AREAS (SEE TYP. CONCRETE ENCASEMENT DETAIL)

* CLEAN OUTS MUST BE INSTALLED IN LAWN AREAS, NOT IN SIDEWALK OR DRIVEWAY AREAS UNLESS DIRECTED BY ENGINEER

ERIE COUNTY
DEPT. OF ENVIRONMENT & PLANNING
DIVISION OF SEWERAGE MANAGEMENT

REVISIONS	
6/9/92	ADDED CLAY DAM
3/19/93	OPEN CUT CLARIFICATION
2/7/94	ADDED CLAY DAM DIMENSIONS CHANGED NOTES 1 & 2 TO A & B
7/14/99	1' SELECT FILL OVER PIPE
12/01	ADDED NOTE ON LOCATION OF VENTS & C.O.

File: d-24 Date: 3/1/91

STD. DETAIL

24

CLEAN-OUT DETAIL FOR SERVICE CONNECTION

(JANUARY 2012)

NOTES:

1. BID ITEM 7 SHALL INCLUDE FURNISHING AND INSTALLING 6" WYE, 6" ELBOW, 6" PIPE (VERTICAL), CLEAN OUT BODY AND BRASS PLUG.
2. HOUSE LATERAL INSTALLATIOIN SHALL BE FIGURED UNDER BID ITEM 10.
3. CLEAN OUT BODIES SHALL BE STANDARD CAST IRON FERRULE TYPE AND CLEAN OUT PLUG SHALL BE BRASS.
4. ALL PAVEMENT CROSSINGS (OPEN CUT METHOD) WITH LESS THAN 4'-0" COVER SHALL BE ENCASED WITH 2000 PSI CONCRETE.
5. CLEAN-OUTS ARE REQUIRED AS SHOWN ON PLANS.
6. SHEETING, SHORING MATERIALS OR SHIELDS SYSTEMS NOT SHOWN.
7. CLEAN OUTS MUST BE INSTALLED IN LAWN AREAS, NOT IN SIDEWALK OR DRIVEWAY AREAS UNLESS DIRECTED BY ENGINEER.

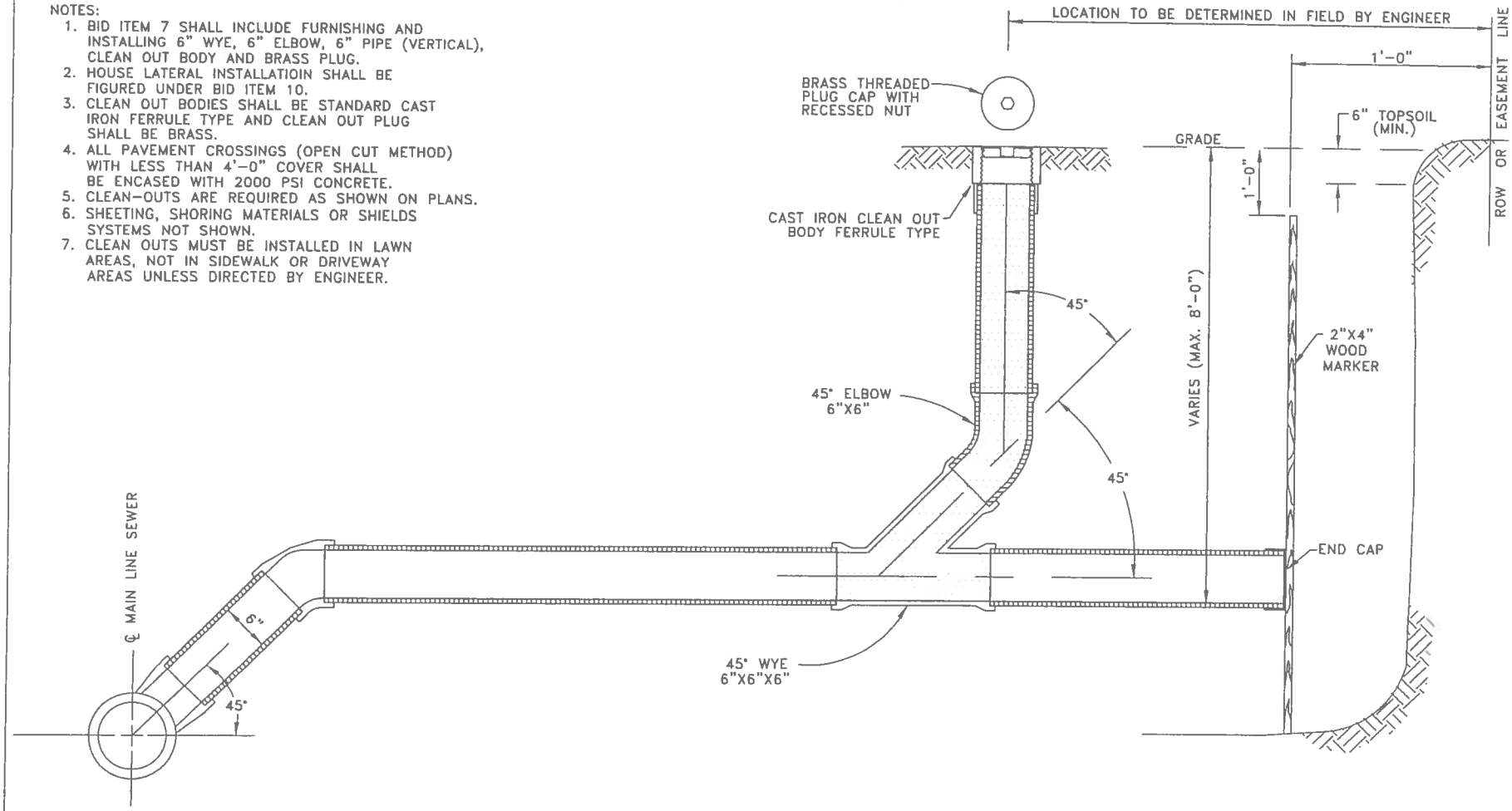

ERIE COUNTY
DEPT. OF ENVIRONMENT & PLANNING
DIVISION OF SEWERAGE MANAGEMENT

Rev. 1	5/93	4'-0" COVER, C.I. CAP "RECESSED NUT"
Rev. 2	2/94	CHANGED DIM LINE FOR MAX. DEPTH
Rev. 3	12/01	ADDED NOTE 7
Rev. 4	5/02	CHANGED C.I. CAP TO BRASS
Rev. 5	6/05	1' MIN. FROM EDGE OF WALK NOTE
Rev. 5	1/12	CHANGED C.I. TO BRASS NOTES 1 & 3
File:	d-28	Date: 3/1/91

STD. DETAIL

28

SANITARY SEWER PIPE & MANHOLE ABANDONMENT
(JANUARY 2012)

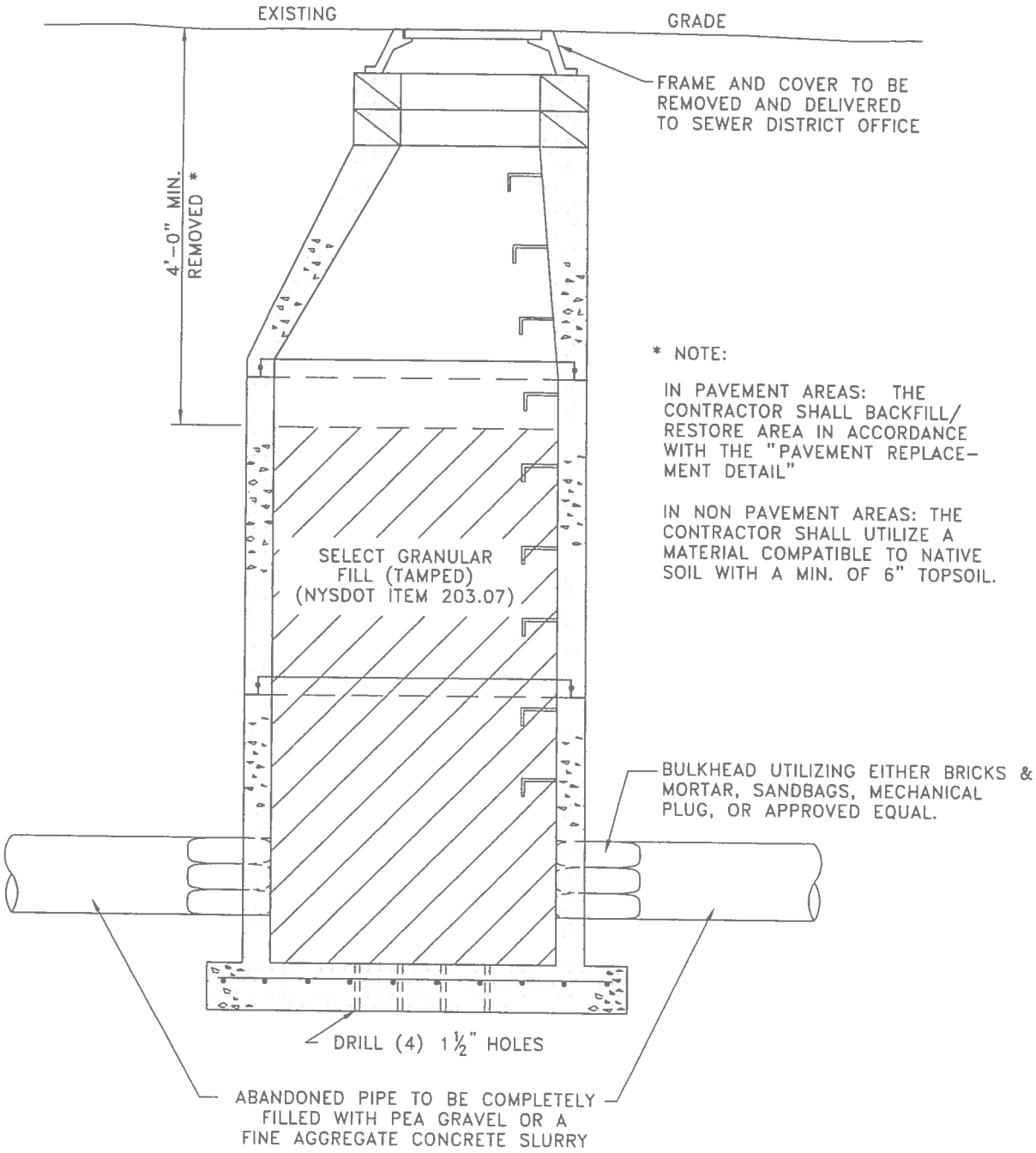

* NOTE:

IN PAVEMENT AREAS: THE CONTRACTOR SHALL BACKFILL/ RESTORE AREA IN ACCORDANCE WITH THE "PAVEMENT REPLACEMENT DETAIL"

IN NON PAVEMENT AREAS: THE CONTRACTOR SHALL UTILIZE A MATERIAL COMPATIBLE TO NATIVE SOIL WITH A MIN. OF 6" TOPSOIL.

ERIE COUNTY DEPT. OF ENVIRONMENT & PLANNING DIVISION OF SEWERAGE MANAGEMENT	Rev. 1 2/7/94	ADDED TAMPED TO SELECT GRANULAR FILL	STD.DETAIL
	Rev. 2		33
	File: d-33	Date: 7/18/91	

CONNECTION TO EXISTING MANHOLE

(JANUARY 2012)

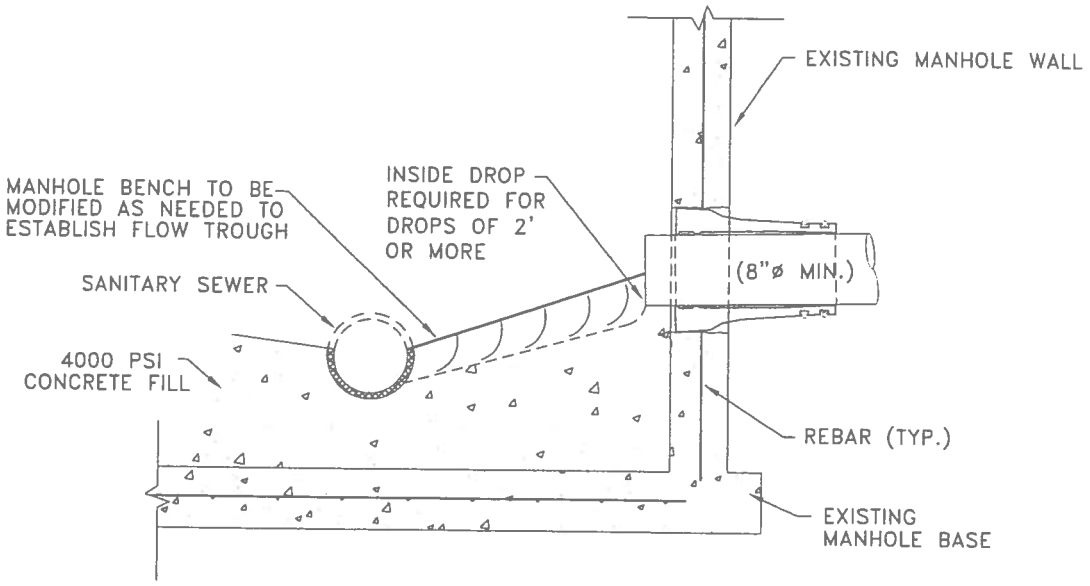

NOTES:

1. CORE DRILL ENTRANCE HOLE IN PRECAST MANHOLE BARREL, BASE AND/OR BENCH FOR REQUIRED PIPE CLEARANCE. PER MANUFACTURERS RECOMMENDATIONS.
2. DOES NOT APPLY TO HOUSE LATERALS.
3. WATERTIGHT PIPE TO MANHOLE BOOT SEAL REQUIRED FOR ALL CORE DRILLED ENTRANCE HOLES IN MANHOLE BARREL AS SHOWN BELOW.

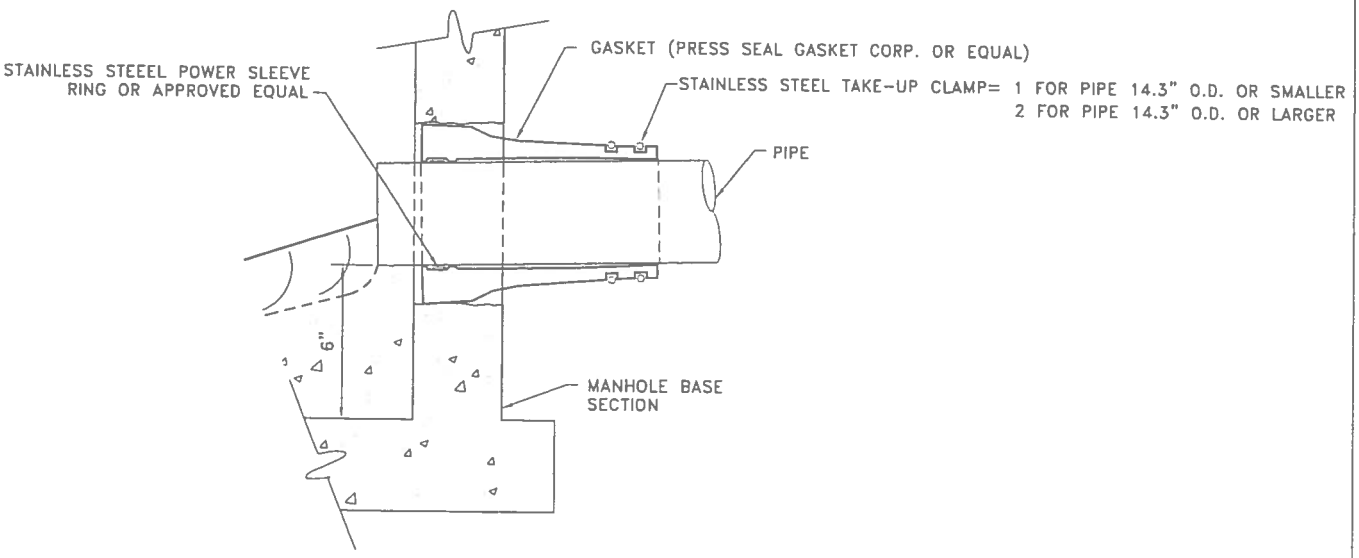

ERIE COUNTY DEPT. OF ENVIRONMENT & PLANNING DIVISION OF SEWERAGE MANAGEMENT	Rev. 1 12/9/96	ADDED MH BOOT SEAL DETAIL AND NOTE.	STD.DETAIL 37
	Rev. 2		
	File: d-37	Date: 4/15/93	

Cleanout in Pavement/Sidewalks
Non Residential and Commercial Projects
(JANUARY 2012)

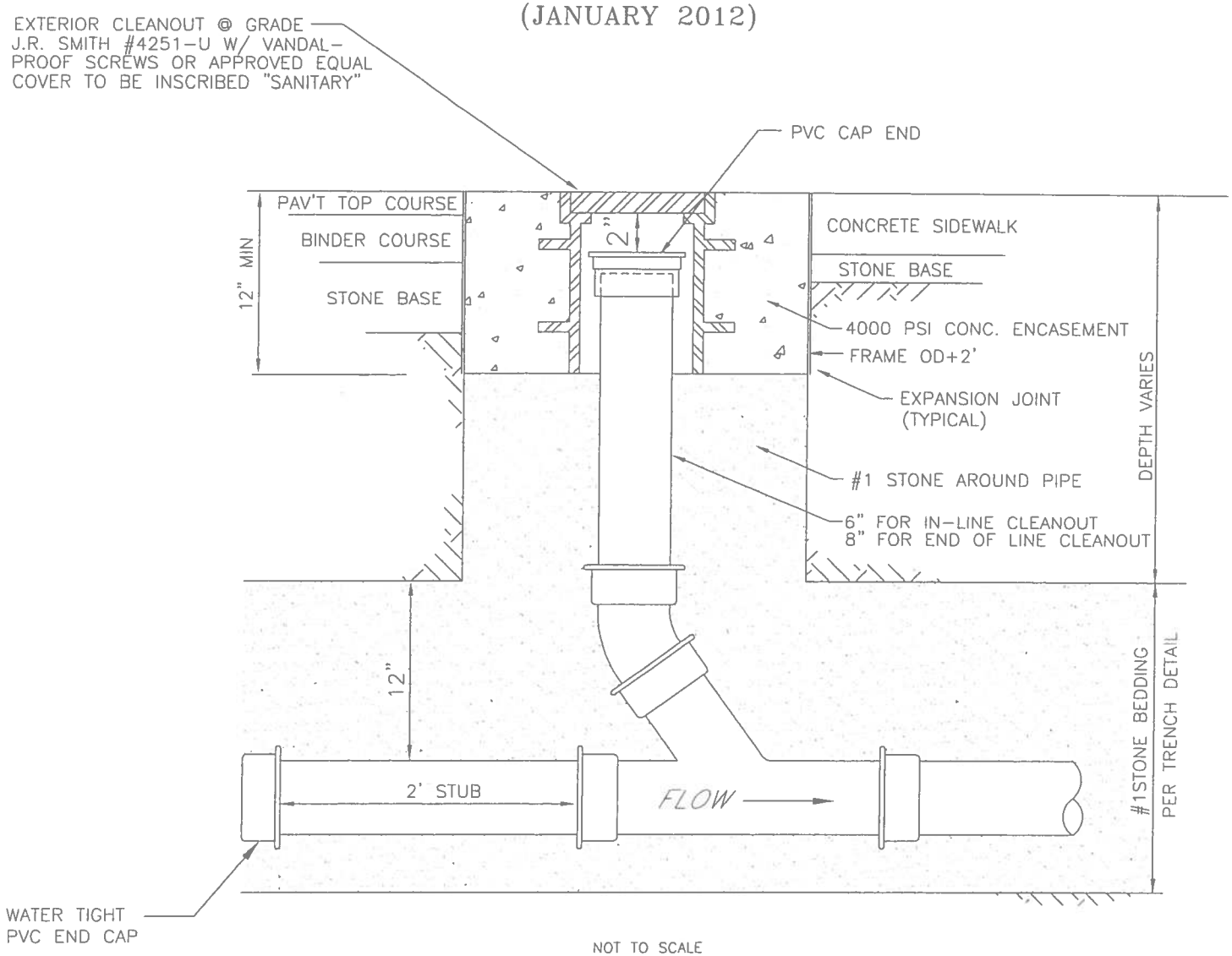

NOT TO SCALE

ERIE COUNTY
DEPT. OF ENVIRONMENT & PLANNING
DIVISION OF SEWERAGE MANAGEMENT

REV 07/99	ADD MIN. DISTANCE AND MARKER
REV 12/01	ADDED #1 STONE AROUND PIPE
REV 01/12	REMOVED 2X4 MARKER
File: d-53	Date: 5/13/97

STD. DETAIL
53

CLAY DAM RELIEF PIPE

(JANUARY 2012)

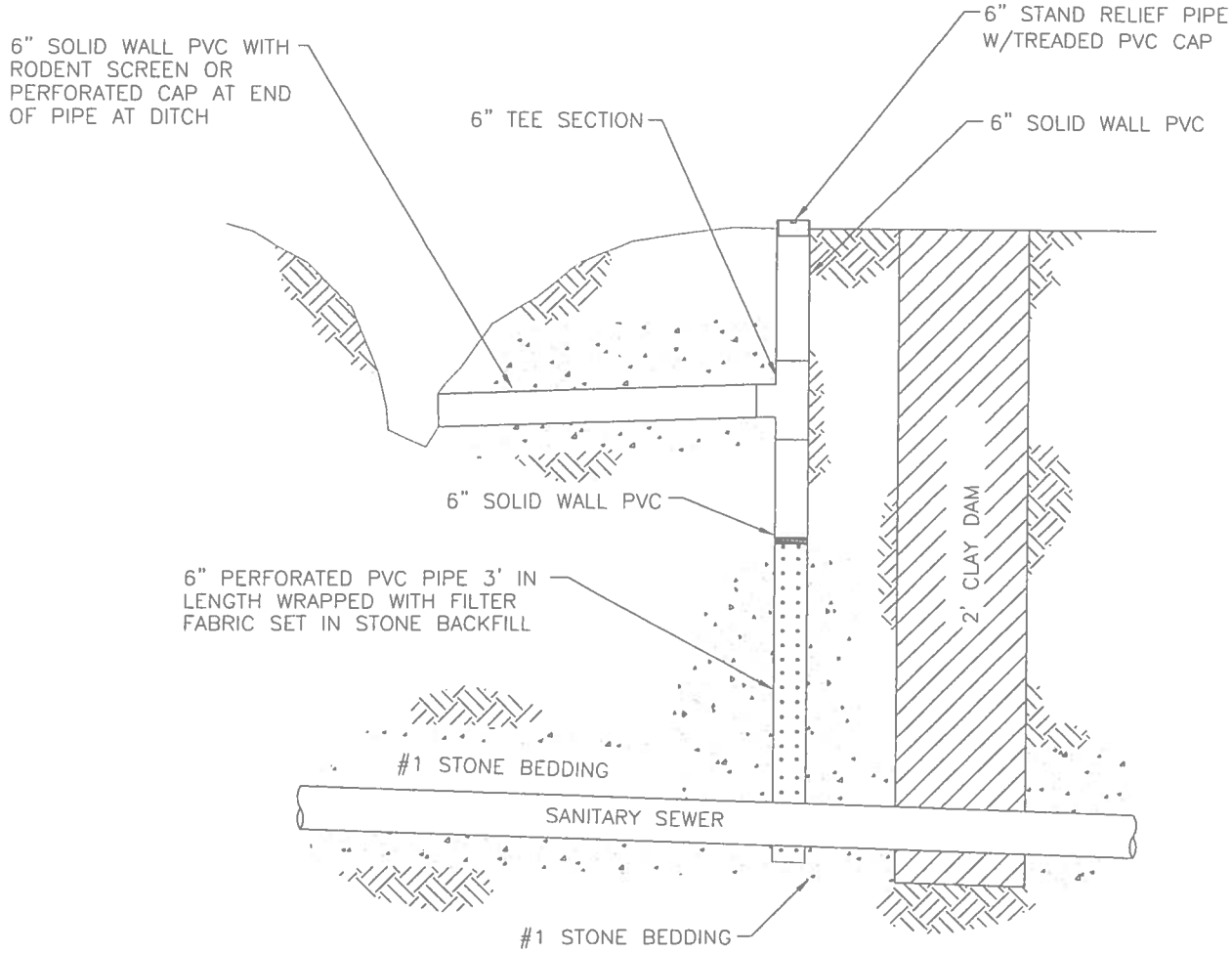

ERIE COUNTY
DEPT. OF ENVIRONMENT & PLANNING
DIVISION OF SEWERAGE MANAGEMENT

Rev. 1			STD. DETAIL
Rev. 2			55
Rev. 3			
File:	d-55	Date: 12/2001	